Information Management and Business Review (ISSN 2220-3796)
Vol. 17, No. 2(S), pp. 515-521, August 2025

The Nexus between Product Features, Brand Image, Service Quality and Islamic Banking Performance in Malaysia

*Muhammad Ridzuan Abdul Aziz, Nuralya Natasha Musa, Nursarah Yasmin Kamal Hashim, Nurul Amirah Hasanah Abdul Wahab, Siti Maryam Alias, Wan Muhammad Idham Fahmi Wan Anuar
Faculty of Business and Management, Universiti Teknologi MARA (UiTM), Malaysia
Email: *ridzuandba@uitm.edu.my
Corresponding Author: Muhammad Ridzuan Abdul Aziz

Abstract: Islamic banking in Malaysia has been operating in parallel to conventional banking since the establishment of the first Islamic bank in the country in 1983. Thus, Islamic banking in Malaysia has been facing stiff competition against traditional banking in the country with a mixed population of Muslims and non-Muslims. It is crucial to identify the factors that may impact the performance of Islamic banking in the country. Therefore, this research aims to explore the factors that could affect Islamic banking performance in Malaysia. This research presents a conceptual framework on the effects of product features, brand image, and service quality on Islamic banking performance, based on the review of past research. Research hypotheses are proposed based on the theorised relationship among the variables in this research. Significant effects are expected between product features, brand image, service quality, and Islamic banking performance. This research highlights the importance of Islamic banks to manage their product features, brand image, and service quality to enhance their performance in the highly competitive banking industry.

Keywords: *Islamic Banking, Product Features, Brand Image, Service Quality, Islamic Banking Performance.*

1. Introduction

The Malaysian banking landscape consists of both the Islamic banking system and the conventional banking system, which operate in parallel to one another. Islamic banking in Malaysia began in 1967 with the establishment of Lembaga Tabung Haji (Muslim Pilgrimage Fund Board) to accept savings from Muslims for hajj purposes (Bank Negara Malaysia, 2023a). Subsequently, the first Islamic bank in Malaysia, Bank Islam Malaysia Berhad, was established in 1983 to serve the needs of Muslims in the country for banking products and services that comply with Islamic law or Shariah (Bank Islam Malaysia Berhad, n.d.). Islamic banking in Malaysia has been facing very stiff competition from conventional banking despite the dominance of Muslims in the country. As of December 2024, assets of the Islamic banking system of the country were recorded at USD260 billion, representing 43% of loans and financing of the Malaysian banking industry (FitchRatings, 2025). The report by Fitch Ratings (2025) also pointed out that the growth of Islamic banking deposits has fallen short of the financing growth since 2020. The report by Fitch Ratings (2025) also indicated the lower proportion of the low-cost current account savings account (CASA) Islamic deposits compared to the conventional banking deposit, thus proving the stiff competition faced by Islamic banking from its competitor, conventional banking. Consequently, Islamic banking needs to improve its performance compared to conventional banking. Islamic banking can leverage its product features, brand image, and service quality to improve its performance. Therefore, it is crucial to study the effects of product features, brand image, and service quality on the Islamic banking market performance. This research has the following objectives:

Research objective 1: To identify the relationship between product features and Islamic banking performance.
Research objective 2: To identify the relationship between brand image and Islamic banking performance.
Research objective 3: To identify the relationship between service quality and Islamic banking performance.

2. Literature Review and Hypotheses Development

Theory of Social Exchange

Social Exchange Theory pointed out that relationships are developed through mutual exchange, whereby individuals try to strike a balance between rewards and costs. The theory proposed trust, commitment, and satisfaction as the factors influencing a bank-customer relationship. Trust is considered crucial for the Islamic banking business. Banks are expected to fully comply with Shariah requirements and avoid involving themselves with prohibited activities, including interest, gambling, and excessive uncertainty. Dedication to

ethics in line with Shariah requirements will reinforce morality among customers, and consequently enhance trust and satisfaction (Raza et al., 2023). An Islamic bank and its customers can be involved in a relationship that provides benefits to both parties. Through the provision of equitable, ethical, and transparent services, Islamic banks can fulfill the expectations of customers and consequently gain loyalty from customers. The relationship between bank and customer can be strengthened, and consequently lead to customer retention as the customer perceives value from such a relationship.

Theory of Social Identity

Social psychologists Henri Tajfel and John Turner (Tajfel & Turner, 1979) created Social Identity Theory in the late 1970s. According to the Social Identity Theory, the group to which an individual belongs has a profound influence on their feelings. According to this theory, people divide themselves and others into social groups, such as religious, professional, or cultural groups, and these classifications produce shared identities. In the context of Islamic banking, this can be used to understand how customers might develop a sense of collective identity through their relationship with a Shariah-compliant bank. Customers may see their involvement with Islamic banks as an extension of their personal and social identity, especially if they respect religious principles and ethical financial practices (Tajfel & Turner, 1979). Social identity focuses on three important psychological processes that help people create and maintain their social identities, such as social categorization, social identification, and social comparison. Social categorization involves putting people together to understand and define social settings. Islamic banking customers support ethical and religious practices, in contrast to conventional banking customers. Social identification enhances such a relationship by linking the customer's identity with the Islamic banks. Such a link enhances customer loyalty and brand attachment as customers' personal and social trust are strengthened upon using Shariah-compliant services (Tajfel & Turner, 1979).

Theory of Service Quality

"The difference between what is expected from each service dimension and what the consumer perceives he receives from them" is a general definition of service quality (Shonk & Chelladurai, 2008). Analyzing consumer perception and satisfaction requires an understanding of this gap. The SERVQUAL model, developed by Parasuraman et al. (1988), is one of the fundamental frameworks in this discipline. It identifies five dimensions of service quality: tangibility, assurance, responsiveness, empathy, and reliability. The term "tangible goods" describes the actual building, furniture, and appearance of the staff. Reliability highlights a bank's ability to consistently deliver on its promises. Responsiveness shows that you are eager to help customers and offer timely service. Reassurance is associated with expertise, courtesy, and trustworthiness of employees, while empathy emphasizes personal care. These characteristics are extended by Brady and Cronin's (2001) hierarchical model of perceived service quality, which combines three main constructs, including outcome quality, service environment quality, and interaction quality. The importance of customer service provider relationships is underscored by the quality of interactions, where perceptions can be influenced by the service delivery process as much as the final product. While outcome quality focuses on service advantages, service environment quality highlights how the physical environment affects the customer experience (Chen et al., 2012). Amirzadeh and Shoorvarzy (2013) found that in the context of Islamic banking, customers are often more concerned with practical aspects such as reducing waiting time and ensuring reliable, polite employees rather than complying with Islamic law. Although these services are based on adherence to Islamic principles, customers are more likely to focus on the practical and human elements of service provision. To successfully meet customer expectations, Islamic banks must strike a balance between operational effectiveness and their ethical obligations. Service quality theory offers a systematic method for understanding and improving customer experience. This framework helps Islamic banking organizations to improve customer satisfaction and create lasting loyalty by filling service dimension gaps, streamlining interactions, and making practical improvements a priority.

Islamic Banking Performance

Organizational performance is critical as it reflects the ability of an organization to achieve strategic goals, maintain operational efficiency, as well as ensure sustainability and competitiveness in the industry. Islamic banking market performance is defined as fulfilling the expectations of customers and matching market demands in an Islamic way, which is by following the shariah guidelines (Dusuki & Abdullah, 2007). The performance of Islamic banking is shown by the consistent growth and significant contribution to the overall profitability of the Islamic banks (Bank Negara Malaysia, 2023b; Islamic Financial Services Board, 2023).

Islamic banks provide various products, dominated by financing facilities as their income-generating products. The biggest contributor of profits to the Islamic banks is the home financing portfolio as it accounts for more than half of the financing profits of the Islamic banks (Amin et al., 2017). This market performance is supported by the attraction of Shariah-compliant products, which attract both Muslim and non-Muslim consumers due to their ethical and safe nature (Amin et al., 2017). Islamic banking performance can be assessed from the perspective of economic, environmental, and social (Alsmadi et al., 2023), which means that the performance can be measured in monetary terms or non-monetary terms (perceptions). Islamic banking performance guarantees the sustainability of the Islamic banks. Strong financial performance is very important to guarantee the sustainability and growth of Islamic banks, especially in the face of competition from conventional banks and digital finance players. Islamic banks must show financial resilience and effectiveness to remain relevant (Ali et al., 2021). Unlike conventional banks, which only strive to make profits, the performance of Islamic banks also covers the achievement of Islamic values such as social justice, community wellbeing, and transparency. Therefore, Islamic banking performance includes financial and non-financial dimensions (Mohd Nor et al., 2020). Good performance plays an important role in increasing customer and investor confidence in the integrity and efficiency of Islamic banking institutions. This includes the ability of banks to comply with Shariah principles while achieving competitive returns (Abdullah et al., 2022). Performance is also used to assess the success of Shariah governance implementation on the operations and reputation of Islamic banks (Rahman & Majid, 2021). In a recent study by Alkindi and Utami (2025), it was shown that the profitability of Islamic banks could be achieved by complying with Shariah and by being responsible towards the environment. They also pointed out that Islamic banks' policies and strategies must emphasize green practices as an important aspect in strengthening financial performance, in line with the Sustainable Development Goals.

Product Features

Product features refer to the tactics used by content marketing to attract customers to buy the product, and it is also a key to reducing environmental consequences while simultaneously presenting a competitive advantage to potential customers a competitive advantage. Therefore, the product can be tangible or intangible since the main purpose is to attract customers and satisfy their wants and needs. Product features in the technology sector are characterized by unique characteristics and/or unidentified technologies that are challenging to explain to a large audience (Chaffey, 2024; Corazza, 2018; Al-Malkawi et al., 2023; John et al., 1999). Product features significantly influence performance in the banking market by shaping customer experiences, meeting varied financial needs, and differentiating banks from competitors. Besides, the degree to which a product's visual components are regarded as aesthetically pleasing is known as product features (Shahid et al., 2022). Shahid et al. (2022) also highlighted that by offering Shariah-compliant products, Islamic banks may increase their customer base and build Muslim community confidence. Development of Islamic banking products is essential to the overall development and stability of the Islamic finance sector. Product features and performance are regarded as the most significant components in developing a bank's competitive advantage. Furthermore, banks are continuously analyzing the features and performance of their current products to determine whether other products with broader features and performance can help them gain a competitive edge and improve their market position in high-technology markets that are always changing (Al-Kwifi & McNaughton, 2013). Certain product features become appealing only when they contribute to excellent performance in a way that differentiates them from other products in the market. In a recent study by Miah et al. (2024), the use of electronic banking applications in serving customers, convenient locations of the bank branches, favorable terms and conditions imposed on the products and services given by the bank, attractive product packages and offerings by the bank, and awareness of the customers towards the Islamic banking products were found to be the factors considered by the customers in choosing an Islamic bank. Based on the above arguments, the following hypothesis is proposed:

H_1: There is a significant relationship between product features and Islamic banking performance.

Brand Image

Brand image refers to a variety of human characteristics related to the brand. However, it is also referred to as a word, sign, symbol, or design, or an assortment of such things, that differentiates the products or services of one seller or group of sellers from the products of competitors. From a different point of view, brand image is also referred to as customers' overall opinion and sentiment about a business, which can affect their purchasing decisions (Aaker, 1997; Zhang, 2015). Company brands or products in the market could become a company's personality trait. This can be called brand image. These features are impacted by marketing, corporate social

responsibility, and other methods that have been used by the company (Araujo et al., 2023; Rico et al., 2023). Islamic banks not only provide products and services, but they also have ethical aspects that emerge from the Islamic laws, which differ from those of conventional banks. Therefore, the customers in the Islamic Bank ecosystem identify with financial institutions that comply with the Islamic views (Albaity & Rahman, 2021). The transparency of Islamic Banks that follow the Shariah guidelines and the ethics plays a big role in engaging and connecting with their customers (Abbas et al., 2020). (Rohmad et al., 2022) stated that brand image has a positive relationship with the Islamic Bank, as they follow the Shariah-compliant rules and help their customers gain and boost their trust in them. With the increase of globalization, the banking sector has improved all kinds of services that they had due to the need to continuously grow. In a recent study by Siyamto et al. (2025), it was found that customers with a positive perception towards Islamic bank image tend to have trust in the institution, and consequently enhance intention and decision in using the Islamic bank service. Siyamto et al. (2025) had also suggested that the Islamic bank double its effort in improving its image by delivering Shariah values consistently through all marketing channels, highlighting social responsibility and services based on religion, and developing a reputation through customer testimony and Shariah recognition. Based on the above arguments, the following hypothesis is proposed:

H_2: There is a significant relationship between brand image and Islamic banking performance.

Service Quality

The capability of a service provider to effectively satisfy customers to improve market performance is referred to as service quality. "Quality" is also a key factor in economic success in the service industry. Service quality also refers to providing better or superior service in comparison to what the customer expects (Ramya et al., 2019). Two components of the customer's perception of service quality include the process-related dimensions and the technical or final dimension (Ramya et al., 2019). A good and stable market performance of Islamic banking is influenced by the service quality. This can be shown by the customers who are loyal and satisfied with the products and services that the bank offers (Afifah & Kurniawati, 2021; Ahmed et al., 2022). When the customers are satisfied and happy, they will likely recommend it to others and make it more popular among people, and develop more customers (Lee et al., 2020). This will indirectly increase the market performance of the Islamic banking industry, and people will start to believe and try to involve themselves with Islamic banking instead of conventional banking. Things are getting more challenging as technologies around the world are continuously advancing. This will cause Islamic Banking and other sectors to have no option but to follow and adapt to this digital age. However, most of the banks have similar features that make them look similar with no differentiation, such as their online banking and mobile apps. Therefore, banks find out that the customers prefer 'high-touch' interaction since it is more trusted (Grant Thornton, 2024). Banks need to give more focus on 'high-touch' interaction instead of 'high-tech' interaction to maintain their market performance (Angur et al., 1999). Zeitun and Anam (2024) highlighted that service quality is important for Islamic banks as it is the main driver in enhancing customer satisfaction, and consequently performance of the Islamic bank. Based on the above arguments, the following hypothesis is proposed:

H_3: There is a significant relationship between service quality and Islamic banking performance.

Figure 1: Research Framework

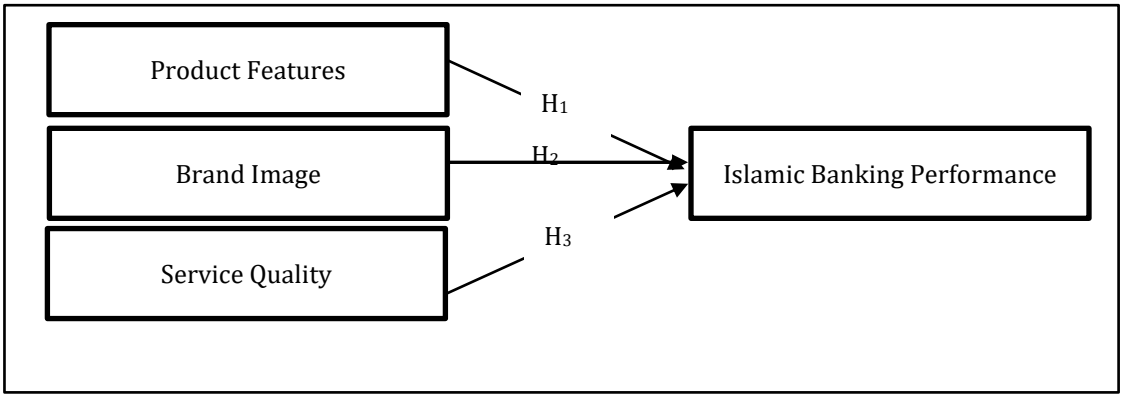

3. Research Design

The instrument to be used to gather data in the research is a questionnaire involving items or questions adopted or adapted from previous studies. Responses will be gathered online through Google Forms, involving closed-ended questions structured on a Likert scale, which require the respondents to evaluate each statement on a scale from 1 (strongly disagree) to 5 (strongly agree). Convenience sampling is chosen to collect data from the population of Islamic banking customers in Malaysia, as it is impossible to obtain the list of Islamic banking customers due to the secrecy of customer information. Convenience sampling is the simplest kind of non-probability sampling, which seeks to get information from respondents who are "convenient" for the researcher to contact. Researchers may choose individuals at random who are open to being approached and taking part in the study using this convenience sample technique, rather than selecting them based on a predetermined set of characteristics, also called a demographic. Descriptive and inferential statistical analyses will be carried out on the data collected using Statistical Package for the Social Sciences (SPSS) software. Descriptive statistics like means and standard deviation will be used to summarise and describe the characteristics of the variables and provide an overview of the data that has been collected. Inferential statistics will be produced using regression analysis on the data collected from the sample to describe and make inferences about the population. The regression analysis is required to test the hypotheses on the effects of product features, brand image, and service quality on the Islamic banking market performance.

4. Theoretical and Managerial Implications

Findings from this research contribute to the literature on Islamic banking management by proposing the relationship between product features, brand image, service quality, and Islamic banking performance through the integration with the Theory of Social Exchange, Theory of Social Identity, and Theory of Service Quality. The relationship between product features, brand image, service quality, and Islamic banking performance is established. Findings from this research highlight the importance of Islamic banks to carefully manage their product features, brand image, and service quality, to enable them to enhance their performance in the highly competitive market. Such actions must be considered in the banks' strategies to remain relevant in the market and survive the competition, not only against other Islamic banks but also against conventional banks.

Conclusion

Further studies are required to examine the effects of product features, brand image, and service quality on Islamic banking performance. Hence, a questionnaire survey will be designed and distributed to empirically examine these effects. Responses gathered will be analysed using SPSS in testing the research hypotheses. This research is limited to the Malaysian context. Future researchers should consider testing the research framework in other countries to increase the generalisability of the findings. We hope that the research findings will help the Islamic banks in enhancing their performance. The results will also assist future researchers in designing their studies on Islamic banking performance.

References

Aaker, J. L. (1997). Dimensions of brand personality. *Journal of Marketing Research, 34*(3), 347. https://doi.org/10.2307/3151897

Abbas, A., Nisar, Q. A., Mahmood, M. A. H., Chenini, A., & Zubair, A. (2020). The role of Islamic marketing ethics towards customer satisfaction, *Journal of Islamic Marketing, 11*(4). https://doi.org/10.1108/JIMA-11-2017-0123

Abdullah, N. I., Hashim, F., & Ismail, N. (2022). Financial and social performance of Islamic banks: The role of governance mechanisms. *Journal of Islamic Accounting and Business Research, 13*(1), 34-56. https://doi.org/10.1108/JIABR-07-2021-0191

Afifah, A., & Kurniawati, N. A. (2021). Influence of service quality dimensions of Islamic banks on customer satisfaction and their impact on customer loyalty. *Journal of Islamic Economic Laws, 4*(2), 105-136. https://doi.org/10.23917/jisel.v4i2.15089

Ahmed, S., Mohiuddin, M., Rahman, M., Tarique, K. M., & Azim, Md. (2022). The impact of Islamic Shariah compliance on customer satisfaction in Islamic banking services: Mediating role of service quality, *Journal of Islamic Marketing, 13*(9), 1829-1842. https://doi.org/10.1108/JIMA-11-2020-0346

Albaity, M., & Rahman, M. (2021). Customer loyalty towards Islamic banks: The mediating role of trust and attitude. *Sustainability, 13*(19), 10758. https://doi.org/10.3390/su131910758

Ali, S., Zainal, A., & Hassan, R. (2021). Evaluating performance of Islamic banks: A Maqasid Shariah approach. *International Journal of Islamic and Middle Eastern Finance and Management, 14*(4), 789–805. https://doi.org/10.1108/IMEFM-10-2020-0485

Alkindi, M., & Utami, W. (2025). A comparative study of Islamic conformity, profitability, and green performance in Southeast Asian Islamic banks. *Banks and Bank Systems, 20*(1), 174-190. http://dx.doi.org/10.21511/bbs.20(1).2025.15

Al-Kwifi, O. S., & McNaughton, R. (2013). Technology switching and product innovation in capital-intensive technology markets: The case of magnetic resonance imaging equipment. *Journal of Business & Industrial Marketing, 28*(5), 421-431. http://dx.doi.org/10.1108/08858621311330263

Alsmadi, A. A., Alrawashdeh, N., Al-Gasaymeh, A., Al-Malahmeh, H., & Moh'd Al-hazimeh, A. (2023). Impact of business enablers on banking performance: A moderating role of Fintech. *Banks and Bank Systems, 18*(1), 14-24. https://doi.org/10.21511/bbs.18(1).2023.02

Al-Malkawi, H. N., Rizwan, S., & Sarea, A. (2023). Factors affecting buying decisions of Islamic banking products: The moderating role of religious belief. *International Journal of Emerging Markets.* https://doi.org/10.1108/ijoem-03-2023-0439

Amin, H., Abdul Rahman, A. R., Abdul Razak, D., & Rizal, H. (2017). Consumer attitude and preference in the Islamic mortgage sector: a study of Malaysian consumers. *Management Research Review, 40*(1), 95-115. https://doi.org/10.1108/mrr-07-2015-0159

Amirzadeh, R., & Shoorvarzy, M. R. (2013). Prioritizing service quality factors in Iranian Islamic banking using a fuzzy approach. *International Journal of Islamic and Middle Eastern Finance and Management, 6*(1), 64-78. https://doi.org/10.1108/17538391311310752

Angur, M. G., Nataraajan, R., & Jahera, J. S. (1999). SQ in the banking industry: An assessment in a developing economy. *International Journal of Bank Marketing, 17*(3), 116-125. https://doi.org/10.1108/02652329910269211

Araujo, J., Pereira, I. V., & Santos, J. D. (2023). The effect of corporate social responsibility on brand image and brand equity, and its impact on consumer satisfaction. *Administratives Science, 13*(5), 118. https://doi.org/10.3390/admsci13050118

Bank Islam Malaysia Berhad. (n.d.). *Our history*. https://www.bankislam.com/corporate-info/resources/our-history/#:~:text=The%20bank%20was%20formed%20after,workforce%20of%20more%20than%204%2C500.

Bank Negara Malaysia. (2023a). *The Malaysian Islamic Financial Market Report*. https://www.bnm.gov.my/documents/20124/54166/The-Malaysian-Islamic-Financial-Market-Report.pdf

Bank Negara Malaysia. (2023b). *Financial stability review – Second half 2023.* https://www.bnm.gov.my/documents/20124/13790687/fsr23h2_en_book.pdf

Brady, M. K., & Cronin, J. J. (2001). Some new thoughts on conceptualizing perceived service quality: A hierarchical approach. *Journal of Marketing, 65*(3), 34–49. https://doi.org/10.1509/jmkg.65.3.34.18334

Chaffey, D. (2024, March 15). *The content marketing matrix: A content marketing planning tool to help marketers generate a matrix of ideas for the most engaging content types for their audiences.* Smart Insights. https://www.smartinsights.com/content-management/content-marketing-strategy/the-content-marketing-matrix-new-infographic/

Chen, L. H., Chen, M., Ye, Y., Tung, I., Cheng, C., & Tung, S. (2012). Perceived service quality and life satisfaction: The mediating role of the actor's satisfaction with the event. *International Journal of Sports Marketing and Sponsorship, 13*(4), 7–24. https://doi.org/10.1108/ijsms-13-04-2012-b003

Corazza, L. (2018). Small business social responsibility: The CSR4UTOOL web application. *Journal of Applied Accounting Research, 19*(3), 392. https://doi.org/10.1108/JAAR-11-2014-0122

Dusuki, A. W., & Abdullah, N. I. (2007). Maqasid al-Shari`ah, Maslahah, and corporate social responsibility. *American Journal of Islamic Social Sciences, 24*(1), 25-45. https://doi.org/10.35632/ajiss.v24i1.415

Fitch Ratings. (2025). *Malaysian Islamic banks dashboard: 2025.* https://www.fitchratings.com/research/banks/malaysian-islamic-banks-dashboard-2025-05-02-2025

Grant Thornton. (2024). *Personal touch helps banks satisfy customers.*

https://www.grantthornton.com/insights/articles/banking/2024/personal-touch-helps-banks-satisfy-customers

Islamic Financial Services Board. (2023). *Islamic Financial Services Industry Stability Report 2023. https://www.ifsb.org/wp-content/uploads/2023/10/Islamic-Financial-Services-Industry-Stability-Report-2023_En.pdf*

John, G., Weiss, A., & Dutta, S. (1999). Fundamental issues and directions for marketing. *Journal of Marketing, 63,* 78-91. https://doi.org/10.2307/1252103

Lee, S., Han, H., Radic, A., & Tariq, B. (2020). Corporate social responsibility (CSR) as a customer satisfaction and retention strategy in the chain restaurant sector. *Journal of Hospitality and Tourism Management, 45,* 348-358. https://doi.org/10.1016/j.jhtm.2020.09.002

Miah, M. D., Kassim, N. M., Zain, M., & Usman, M. (2024). Factors affecting SMEs' choice of banks in Oman: An emphasis on Islamic banks. *International Journal of Islamic and Middle Eastern Finance and Management, 17*(6), 1320-1341. http://dx.doi.org/10.1108/IMEFM-04-2024-0179

Mohd Nor, M. N., Haron, S., & Mohd Rani, S. H. (2020). Measuring Islamic banks' performance: A balanced scorecard approach. *ISRA International Journal of Islamic Finance, 12*(3), 385–399. https://doi.org/10.1108/IJIF-12-2019-0200

Parasuraman, A., Zeithaml, V. A., & Berry, L. L. (1988). SERVQUAL: A multiple-item scale for measuring consumer perceptions of service quality. *Journal of Retailing, 64*(1), 12–40.

Rahman, A. A., & Majid, M. S. A. (2021). The impact of Shariah governance on the performance of Islamic banks in Malaysia. *Asian Journal of Accounting and Governance, 16*, 27–35. https://doi.org/10.17576/AJAG-2021-16-03

Ramya, N., Kowsalya, A., & Dharanipriya, K. (2019). Service quality and its dimensions. *EPRA International Journal of Research and Development, 4*(2), 39-41.

Raza, B., St-Onge, S., & Ali, M. (2023). Frontline employees' performance in the financial services industry: The significance of trust, empathy, and consumer orientation. *International Journal of Bank Marketing, 41*(3), 527-539. https://doi.org/10.1108/ijbm-06-2022-0237

Rico, M. G., Collado, A. M., Vijande, M. L. S., Collado, M. V. M., & Imhoff, B. (2023). The role of novel instruments of brand communication and brand image in building consumers' brand preference and intention to visit wineries. *Current Psychology, 42*. https://doi.org/10.1007/s12144-021-02656-w

Rohmad, Rivaldo, Y., Kamanda, S., V., & Yusman, E. (2022). The influence of brand image, promotion, and trust on customer loyalty at Bank BSI Nagoya Batam branch. *Jurnal Mantik, 6*(2), 1-4. https://www.iocscience.org/ejournal/index.php/mantik/article/view/2810/2225

Shahid, M., Bhatti, F. A., Mohtesham, M. M. J., & Mahadi, N. F. B. (2022). The value propositions and the nature of the Islamic banks' products and services in providing solutions for the financial needs of BIMB business customer segments. *El-Barka: Journal of Islamic Economics and Business, 5*(1), 105–134. https://doi.org/10.21154/elbarka.v5i1.3815

Shonk, D. J., & Chelladurai, P. (2008). Service quality, satisfaction, and intent to return in event sport tourism. *Journal of Sport Management, 22*(5), 587-602. https://doi.org/10.1123/jsm.22.5.587

Siyamto, Y., Budiyanto, B., & Khuzaini, K. (2025). The role of Islamic bank image and customer trust in mediating the influence of Islamic marketing on Islamic bank customer decisions. *Journal of Social Research, 4*(2), 266-288.

Tajfel, H., & Turner, J. C. (1979). An integrative theory of intergroup conflict. In W. G. Austin & S. Worchel (Eds.), *The social psychology of intergroup relations* (pp. 33-47). Brooks/Cole

Zeitun, R., & Anam, O. A. (2024). Do product offerings and service quality affect customer satisfaction in Islamic and conventional banks? Evidence from an oil-based economy. *Journal of Islamic Marketing, 15*(11), 2959-2987.

Zhang, Y. (2015). The impact of brand image on consumer behaviour: A literature review. *Open Journal of Business and Management, 3*(1), 58-62. https://doi.org/10.4236/ojbm.2015.31006