Information Management and Business Review (ISSN 2220-3796)
Vol. 14, No. 2, pp. 15-27, June 2022

The Quality of Investigation Audit Influenced by Independence and Integrity

Mahendro Sumardjo[1], Najmatuzzahrah[2], Khoirul Aswar[3*]
[1, 3] Universitas Pembangunan Nasional Veteran Jakarta, Indonesia
[2] Badan Pemeriksa Keuangan, Kepala Perwakilan Bengkulu
khoirulaswar@upnvj.ac.id

Abstract: Quality audits are important not only for investigators but also for auditors when advancing as experts in court. Therefore, the formation of MIA to handle investigative examinations is BPK's answer to the phenomena that occur in society related to the quality of the results of BPK investigations. However, even after the formation of MIA, there were still complaints from the public regarding the quality of the results of investigative examinations. BPK received a lot of attention because of actions that were not in accordance with the BPK auditors' code of ethics, namely integrity violations that resulted in arrest by law enforcers and undergoing trial at the Corruption Court. For this reason, auditors must always maintain an attitude of mental independence, in all matters relating to the provision of audit services, to improve audit quality. This study aims to analyze how independence and integrity can increase the quality of investigation audit. This study involved 267 investigators of Law Enforcement Agencies as respondents using a questionnaire. Furthermore, the data were analyzed using descriptive statistical analysis and SEM techniques. The results of this study provide empirical evidence that independence and integrity have a significant positive effect on the quality of investigation audit.

Keywords: *Independence, Integrity, the Quality of Investigation Audit, BPK.*

1. Introduction

Based on Article 23E of the 1945 Constitution, the Audit Board of the Republic of Indonesia, hereinafter referred to as BPK, has the mandate to examine the management and responsibility of state finances. Further provisions for the implementation of this mandate are spelled out in RI Law Number 15 of 2004 concerning Audit of the Management and Accountability of State Finances and RI Law Number 15 of 2006 concerning the Audit Board. The two laws further regulate the audits conducted by the BPK on state finances. Since the publication of bureaucratic reform in Indonesia, BPK has been required to become a professional audit institution. Therefore, the BPK then made a series of changes, both in terms of institutions, improving the quality of audit results, increasing employee professionalism, improving infrastructure, and fulfilling the budget. These changes are expected to bring about New BPK: Leading by Example. In addition, BPK is also expected to be able to improve audit performance which is of concern to stakeholders. The results of audits of financial reports, performance and audits with specific purposes become public references. This condition prompted BPK to change the audit paradigm to create a prosperous Indonesia. To realize the New BPK: Leading by Example, the BPK has compiled a Strategic Plan so that the ongoing process of change can be directed towards achieving BPK's Vision and Mission.

Therefore, since 2006, the BPK has compiled the 2006-2010 Strategic Plan, the 2011-2015 Strategic Plan, and the 2016-2020 Strategic Plan as a form of BPK's commitment to producing the highest quality audit reports. Quality audits are important not only for investigators but also for auditors when advancing as experts in court. Therefore, the formation of MIA to handle investigative examinations is BPK's answer to the phenomena that occur in society related to the quality of the results of BPK investigations. However, even after the formation of MIA, there were still complaints from the public regarding the quality of the results of investigative examinations. According to Whittington & Pany (2011), factors that affect audit quality, one of which is auditor specialization. They asserted that an auditor will be able to conduct a higher-quality audit than auditors who are not experts in the client's industry sector when the auditor becomes a specialist or expert in that industry, that is when the auditor has a great deal of experience and knowledge of that business. In addition, Louwers et al. (2008) state that the mental attitude of auditor independence is a cornerstone of the high-quality audit.

It is recommended that auditors always maintain their mental attitude of independence, in all matters relating to the provision of audit services, to improve audit quality. The phenomenon of the low audit quality

of BPK, has appeared since before MIA was formed until now, among others, the existence of phenomena in society through the following phenomena: Examination is a process of problem identification, analysis and evaluation carried out independently, objectively, and professionally based on examination standards, to assess the truth, accuracy, credibility and reliability of information regarding the management and responsibility of state finances (RI Law No. 15 of 2004). The term examination can be called "audit". An audit is the collection and evaluation of evidence about information to determine and report on the degree of conformity between the information and criteria set, auditing must be carried out by competent and independent people (Arens et al., 2017). Then Akbar et al. (2016) stated that an auditor to support audit performance must have a competency that can be obtained and improved through two factors, namely experience and education. According to Whittington & Pany (2010), auditor specialization is a factor that affects audit quality. They stated that when an auditor becomes a specialist or an expert in a certain industry, that is, has a lot of experience and deep understanding in a particular client's specific industry, then the auditor will be able to produce a quality audit that is higher quality than with auditors who are not specialized in the client's specific industry area.

In addition, Louwers et al. (2008) state that the mental attitude of auditor independence is a cornerstone of a high-quality audit. It is recommended that auditors always maintain their mental attitude of independence, in all matters relating to the provision of audit services, to improve audit quality. The phenomenon of the low audit quality of BPK, has appeared since before MIA was formed until now, among others, the existence of phenomena in society through the following phenomena: Iskandar Sitorus (in Edj, 2009) stated that the results of the investigation into the Century case conducted by BPK were invalid. The quality of the results of the BPK investigation audit is doubtful because it cannot conclude who is involved and cannot state a clear loss figure. Agus Martowardoyo (in Lestari, 2012) stated that the audit report on Hambalang resources produced by BPK did not reflect the audit results. complete and good. Margarito Kamis (in Sasongko, 2016) stated that he had no second opinion. BPK works based on authority, so it cannot debate the results of the audit. It is because it is not an audit requiring a response plan or the party being audited. He apologized to Ahok to make sure, the BPK audit was about what the answer was incorrect. Margarito said, in the criminal act of corruption, everyone has the right to violate administrative law. However, if no state loss is found, the situation is based on administration. But once there is a state loss, all of it turns into a nature that violates criminal law, that's corruption. Yusril Ihza Mahendra (in Sutiawan, 2018) stated that the 2017 BPK Investigation Audit Report did not meet the financial audit standards set by the BPK, namely BPK Regulation Number 1 of 2017, in particular items 21 to 26.

In addition to the phenomenon related to the low quality of investigation audits described above, BPK has received a lot of attention due to actions that are not in accordance with the BPK auditors' code of ethics, namely in the form of integrity violations that occurred when the examination was carried out which resulted in arrest by law enforcement agencies and undergoing trial at the Corruption Court, are as follows:

- Two BPK auditors, Enang Hernawan and Suharto, were sentenced to a judge with a sentence of four years in prison. Apart from corporal punishment, the two defendants were also obliged to pay a fine of Rp200 million. If not paid, the sentence is replaced with three months in prison (Fat, 2010).
- Drs Bahar (Head of the Examination Team in BPK) was sentenced to imprisonment of four years and six months, while the defendant Munzir (Member of the Examination Team in BPK) was sentenced to four years in prison. The two defendants were also sentenced to be fined Rp 200 million and if not paid, it was replaced by a penalty (subsidiary) of one month in prison (Tanauma, 2012).
- BPK's auditor, Sigit Yugoharto is considered proven to have accepted bribes from the General Manager of Jasa Marga, Purbaleunyi Branch, Setia Budi. The judge sentenced him to 6 years imprisonment and a fine of 250 million rupiahs (Gabrillin, 2018). Meanwhile, in Sembiring (2017), President Joko Widodo praised and appreciated BPK's performance at the 2017 Annual Session of the People's Consultative Assembly. According to President Jokowi, BPK's performance is getting better at home and abroad. The BPK and the Government Internal Supervisory Apparatus have synergized to overcome the overlapping audit conditions.

In addition, President Jokowi appreciated the Audit Result Follow-up Monitoring Information System implemented by the BPK so that the follow-up on the results of examinations in each ministry and government agency can be monitored accurately, efficiently and on time. According to Messier & Prawitt

(2008), Public Accounting Firms (PAF) must always evaluate their commitment, to providing high-quality audit by maintaining the integrity and objectivity of their professional staff (partners and staff), to maintain their reputation in the eyes of the audit service user community. Similar to the BPK, the BPK must be able to maintain a commitment to produce high quality of audit quality by maintaining and ensuring that auditors have high integrity and objectivity when carrying out audits. Thus, the public's expectation of quality audit results from BPK can be realized.

2. Literature Review and Hypothesis Development

Independence: Independence in auditing is behavior that is free from conflicts of interest or the influence of other parties in determining a decision so that it is unbiased and objective in accordance with the facts. Independence is a state of mind that is unaffected by outside forces, unaffected by outside forces' control, and independent of outside forces. Auditor independence refers to the auditor's integrity in assessing the facts and to their use of impartial, unbiased criteria when generating and presenting opinions (Mautz & Sharaf, 1993; Elliott & Jacobson, 1998; Hayes et al., 2005; Patrick, Vitalis & Mdoom, 2017; Rittenberg, Johnstone, Gramling, 2010). Based on the opinions of several experts and previous researchers (Hayes et al., 2005; Arens, Elder & Beasley, 2012; IESBA, 2014; Arens et al., 2017) the measurement of independence variable uses several dimensions and indicators, namely: 1) **I**ndependence of the Audit Program (freedom to determine specific audit techniques, freedom to determine the audit procedures to be used, and freedom to determine alternative examination procedures); 2) Independence of the Audit Investigative (freedom in determining the key areas of the examination, freedom in carrying out activities to obtain audit evidence, and freedom from personal interests that hinder the audit); and 3) Independence of the Audit Reporting (freedom to write down irregularities or fraud that occurred, free to write down the amount of state loss according to audit evidence, and freedom to write down parties related to fraud).

Integrity: Integrity is the moral character of auditors to do things that are honest, fair, and in accordance with prevailing norms and regulations. Integrity is also defined as a quality/ characteristic of individual and organizational behavior; it can even be considered as a corporate culture that applies to individuals and organizations (ICAEW, 1997; IFAC, 2006; IAPI, 2011; Arens et al., 2017). Based on the opinions of several experts and previous researchers (ICAEW, 2007; OECD, 2009) the measurement of integrity variable uses several dimensions and indicators, namely: 1) Moral values (auditors have honesty values in their daily activities, auditors dare to reveal the truth, and auditors are able to carry out the values of justice); 2) Commitments (auditor has character only words with deeds, the auditor who is serious in carrying out the examination, and auditors who have the will to complete work); and 3) Qualities (auditors have the character of accepting open-mindedness, auditors have the ability to adapt to the environment, and auditors have the courage to fight for something that is believed to be true).

The Quality of Investigation Audit: The quality of audit is the level of quality of audit results determined by the absence of material misstatements/ procedures, the achievement of audit objectives through methodologies or guidelines prepared by the auditor, legally accountable in court, carried out in accordance with the applicable code of ethics and regulations and does not cause problems/ unrest in the community (DeAngelo, 1981; Arrunada, 1999; GAO, 2003; Hayes et al., 2005; Gul, Wu, & Yang, 2013; Lee, 2016). Based on the opinions of several experts and previous researchers (FRC, 2008; Francis, 2011; Knechel et al., 2012), the measurement of the quality of investigation audit variable uses several dimensions and indicators, namely: 1) Auditor Competence (have a certificate of investigative auditing expertise, having the ability to conduct audits and investigations, and having experience doing investigation audits); 2) Process of Implementation Investigative Audit (understanding the audit risk, following the standards/guidelines that have been set, and infrastructure that supports the implementation of investigation audits); 3) Reporting the Investigative Audit Result (reveal any irregularities, disclose the parties related to irregularities, and disclose the impact of deviations that occur). According to Sekaran and Bougie (2013), the hypothesis is logically conjectured relationship between two or more variables expressed in the form of a testable statement. In accordance with the above understanding, the hypothesis is a logically suspected relationship between two or more variables in the formulation of propositions that can be tested empirically.

Independence and Investigation Audit Quality: According to DeAngelo (1981), when used as a proxy for audit quality, fee dependence on a client can be thought of as the relative size of client-specific quasi-rent. The independence of the auditor is one element of the quality of the audit, according to Chang & Monroe (2001). The possibility of diminished independence has an impact on how well auditors perceive the quality of the audit. Furthermore, Jamal & Sunder (2011) stated independence (in fact as well as in appearance) is widely thought to be necessary for the quality of audit, and audit quality is often equated with independence. It is clear from the justifications and conclusions of various earlier researchers that auditor independence affects audit quality. This means that the higher the BPK upholds the independence of auditors in conducting audits, the higher the quality of the audit quality it produces. If the level of auditor independence decreases, then both public perceptions and auditors' own perceptions of the audit quality they produce will also decrease, because auditor independence is believed to be a major milestone in audit quality (DeAngelo, 1981; Chang & Monroe, 2001; Jamal & Sunder, 2011; Rivaldi et al., 2022).
H_1: The impact of independence on investigation audit quality.

Integrity and Investigation Audit Quality: According to Broberg (2013), auditor quality and characteristics including integrity matter to audit quality. Then, according to Bouhawia, Irianto, and Baridwan (2015), job experience, integrity, competence, and organizational dedication have a big impact on audit quality. Integrity and audit results quality showed a substantial and favorable correlation. Susilo & Widyastuti (2015) explain that integrity has a positive effect on audit quality. These results illustrate how important honesty and confidence are in shaping good moral character in an auditor, the moral character an auditor must have in carrying out his performance as an examiner of financial statements can help obtain good audit quality. Thus, based on the research results above, it can be concluded that integrity has a positive effect on audit quality (Broberg, 2013; Bouhawia, Irianto & Baridwan, 2015, and Susilo & Widyastuti, 2015).
H_2: The impact of integrity on investigation audit quality.

3. Research Methodology

The object in this study is the influence of independence and integrity on the quality of investigation audit. By testing hypotheses, this study employs descriptive and causal-explanatory approaches. Based on the research time horizon, included in the category of cross-sectional studies, namely research performed over a period of time, data is collected only once, perhaps in several days or weeks or months, to answer research questions (Sekaran and Bougie, 2013). The data used are primary data collected through instruments (questionnaires) and secondary data. The unit of analysis in this study is investigators at 3 Law Enforcement Agencies (the Indonesian National Police, the Attorney General's Office, and the Corruption Eradication Commission), who have experience working together to uncover cases through investigation audits conducted by BPK. Thus, the sample size set in this study was 267 investigators from 94 Work Units of 3 Law Enforcement Agencies in Indonesia. This study can be regarded as survey research because of the measurement process used to collect information using a questionnaire with a Likert scale. The questionnaire was distributed by visiting the respondent directly and via e-mail. In this study, descriptive statistics were used by compiling a frequency distribution table to determine the level of value (average score) of the research variable. The categorization of respondents' answer scores is arranged based on the maximum score range and the minimum score divided by the number of desired categories. The guidelines for categorizing the research variable scores are presented in Table 2.

Table 2: The Guidelines for Categorizing the Research Variable Scores

Scores	Categorizing
1.00 – 1.80	Not Good
1.81 – 2.60	Not Fair
2.61 – 3.40	Fair
3.41 – 4.20	Good

This study uses quantitative methods with probability statistics which are statistical techniques used to analyze sample data and the results will be applied to the population by testing the significance level of sample data on population parameters through the t-statistics on the confidence interval of 95% and the risk of error at α = 5%. The research hypothesis will be investigated using Lisrel statistical software and the

Structural Equation Modeling (SEM) method. In this study, the construct or latent variable cannot be measured directly using observed variables or indicators. So that it must be lowered first in the form of dimensions, then can it be reflected through the indicators according to the theory used. Indicators used to measure latent variables must be tested for the validity and reliability of the instrument. The test uses the concept of Confirmatory Factor Analysis (CFA). According to Wijanto (2015), a variable is said to have good validity for constructs or latent variables if the value of the t-factor is greater than the critical value ($t_{value} \geq 1.96$) and the standard factor loading ≥ 0.70. According to Hair et al. (2014), factor loading values below 0.50 are very significant and the indicator can be deemed to be legitimate. In SEM reliability testing uses a composite reliability measure and Varian extracted measure. A construct that has good reliability is if the value of Construct Reliability (CR) ≥ 0.70 and the value of Variance Extracted (VE) ≥ 0.50. Next is the preparation of a flowchart which aims to examine the influence of independent variables (exogenous) on the dependent variables (endogenous) as shown in Figure 2.

Based on Figure 2, then the structural model in this study is formulated mathematically, as follows:

$$\eta_1 = \gamma_{11}\xi_1 + \gamma_{21}\xi_2 + \zeta$$

Description: ξ_1 = independence variable; ξ_2 = integrity variable; η1= the quality of investigation audit variable; γ = path coefficient between exogenous latent variables; and ζ = measurement error of endogenous latent variables. The stages of data analysis in this study were developed using the concept of SEM. Furthermore, only the over-identified model that meets the requirements for analysis is based on the following degree of freedom formula requirements: $df = ½ (p+q) (p+q+1) – t > 0$. Description: p = number of exogenous observed variables; q = number of endogenous observed variables; and t = number of parameters to be estimated. The model in this study has a value of p = 18, q = 9, t = 68, with a value of df = ½ (18+9) (18+9+1) - 68 = ½ (27)(28) - 68 = 378 – 68 = 310 > 0, then this research model is identified to over-identified so that it can be continued into the parameter estimation stage. The author chose to use the Maximum Likelihood (ML) method to estimate the parameters of this research model. The next step is to evaluate the Goodness of Fit (GoF) between the data and the research model. After the model is fit with the data, the hypotheses built into the research model can be tested.

Figure 1: Flowchart Research Model

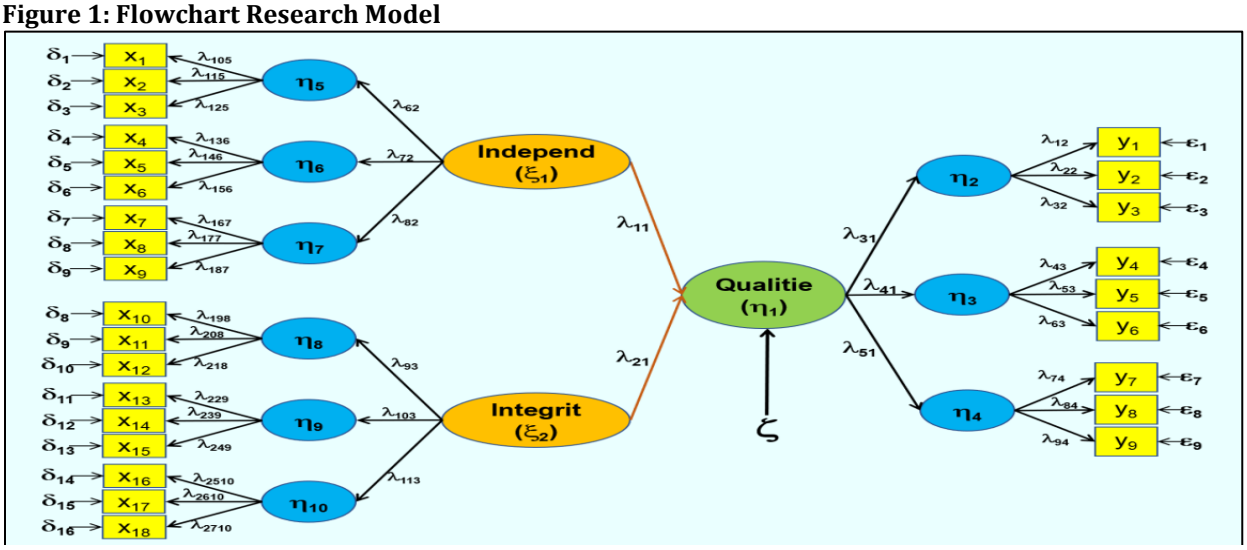

4. Results and Discussion

Descriptive Statistics Analysis: Based on the answers of 267 respondents, the descriptive statistical analysis provided data on average scores and categorization of answers for each variable as presented in Table 3. The variables have a total score and are categorized as "very good" so it has an average score of 4.80 which is also very good.

Table 3: Analysis of Research Variable Scores

No.	Variable	Σ Score	Mean	Categorization
1	Independence	11,514	4.79	Very Good
2	Professionalism	15,547	4.81	Very Good
3	The Quality of Investigation Audit	11,586	4.82	Very Good
	Total	**34,647**	**4.80**	**Very Good**

Source: Data Processing Results (2020).

Confirmatory Factor Analysis (CFA): The suitability of the measurement model was tested using confirmatory factor analysis to find out the unidimensional of the indicators that explained a factor or variable formed. The following are described as confirmatory factor analyses in each research variable.

Independence Variable: This exogenous variable is assessed using three dimensions and nine indicators. Based on Figure 2, The factor loading values for all indicators are greater than 0.5, but the RMSEA is still greater than 0.08. Furthermore, the results of re-specification in Figure 4 show RMSEA value below 0.08. In detail, the value of factor loading can be seen in Table 3. Based on Table 4's findings from the first-order test on the dimensions of IAP, IAI, and IAR, it can be concluded that all of the indicators are legitimate for evaluating each dimension because their factor loadings are all more than 0.5. For all CR values more than 0.7 and VE values larger than 0.5, it is trustworthy. This confirms that the indicators' measurements of each dimension are accurate.

Figure 2: CFA Test of Independence Variable (Standardized)

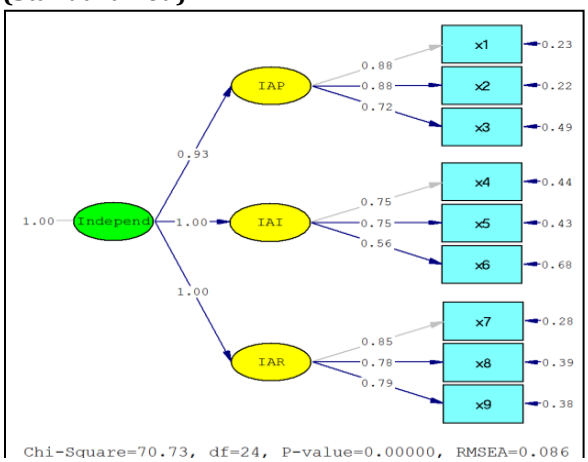

Figure 3: CFA Test of Re-specification of Independence Variable (Standardized)

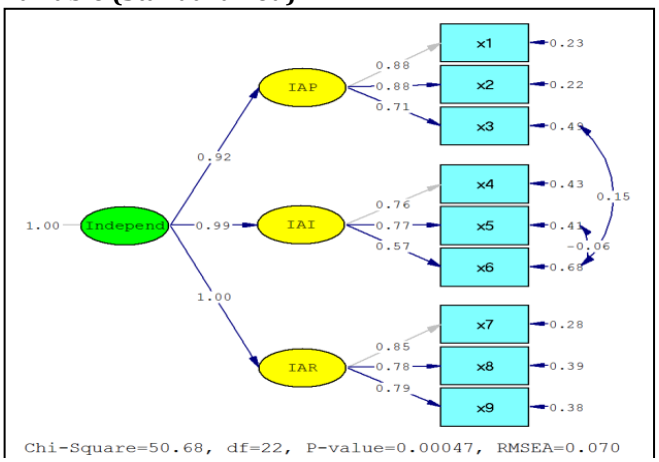

All dimensions have factor loading over 0.5 in the results of the second-order test on the Independence Variable, indicating that all dimensions are valid in assessing Independence Variable. As a result, the factor loading of the IAR Dimension is the highest, making it the strongest in reflecting Independence Variable, whereas the factor loading of the IAP Dimension is the lowest, making the dimension the weakest in reflecting Independence Variable. It is reliable since the CR value is 0.92 > 0.7 and the VE value is 0.94 > 0.5. This demonstrates that while measuring Independence Variable, the three dimensions are consistent.

Table 4: Result of Re-Specification of Independence Variable Validity and Reliability Test

Latent Variable	Indicator	λ	λ^2	ε	CR	VE	Information
First Order							
IAP	x1	0.88	0.77	0.23			
(Independence of	x2	0.88	0.77	0.23	0.87	0.68	Reliable
the Audit Program)	x3	0.71	0.50	0.50			
IAI	x4	0.76	0.58	0.42	0.75	0.50	Reliable
(Independence of	x5	0.77	0.59	0.41			

the Audit Investigative)	x6	0.57	0.32	0.68			
IAR	x7	0.85	0.72	0.28			
(Independence of	x8	0.78	0.61	0.39	0.85	0.65	Reliable
the Audit Reporting)	x9	0.79	0.62	0.38			
Second Order							
	IAP	0.92	0.85	0.15			
Independence	IAI	0.99	0.98	0.02	0.98	0.94	Reliable
	IAR	1.00	1.00	0.00			

Source: The results of data processing (2020).

Integrity Variable: This exogenous variable is assessed using three dimensions and nine indicators. According to Figure 4, despite the fact that every indicator has factor loading values higher than 0.5, the RMSEA is still higher than 0.08. Furthermore, the results of re-specification in Figure 6 show RMSEA value below 0.08. In detail, the value of factor loading can be seen in Table 5.

Figure 4: CFA Test of Integrity Variable (*Standardized*)

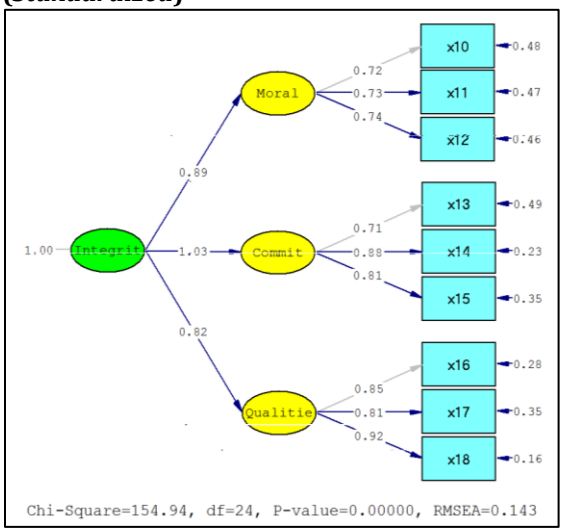

Figure 5: CFA Test of Re-Specifications of Integrity Variable (*Standardized*)

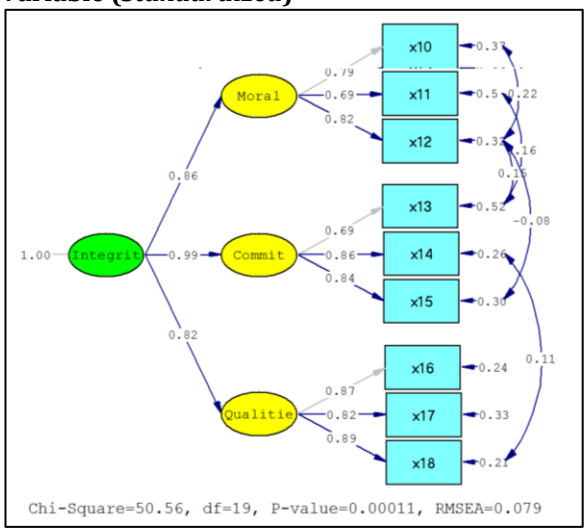

All indicators have factor loading over 0.5, according to Table 5, the results of the first-order test on the dimensions of Moral Values, Commitments, and Qualities, indicate that all indicators are valid in measuring each dimension. For all CR values greater than 0.7 and VE values greater than 0.5, it is dependable. This confirms that the indicators' measurements of each dimension are accurate. According to the findings of the second-order test on the Integrity Variable, all dimensions have factor loadings over 0.5, which shows that they are all valid for evaluating the Integrity Variable. As a result, the Qualities Dimension has the lowest factor loading, making it the least effective at reflecting the Integrity Variable, whereas the Commitments Dimension has the highest factor loading and is therefore the strongest at doing so. As a result, it is dependable as evidenced by the CR value of 0.92 > 0.7 and the VE value of 0.80 > 0.5. This shows that the Integrity Variable is consistently measured across all three dimensions.

Table 5: Re-Specification of Integrity Variable Validity and Reliability Test Results

Latent Variable	Indicator	λ	λ^2	ε	CR	VE	Information
First Order							
	x10	0.79	0.62	0.38			
Moral values	x11	0.69	0.48	0.52	0.81	0.59	Reliable
	X12	0.82	0.67	0.33			
	X13	0.69	0.48	0.52			
Commitments	X14	0.86	0.74	0.26	0.84	0.64	Reliable
	X15	0.84	0.71	0.29			

Table 5: Re-Specification of Integrity Variable Validity and Reliability Test Results

Latent Variable	Indicator	λ	λ²	ε	CR	VE	Information
	X16	0.87	0.76	0.24			
Qualities	X17	0.82	0.67	0.33	0.90	0.74	Reliable
	X18	0.89	0.79	0.21			
Second Order							
	Moral	0.86	0.74	0.26			
Integrity	Commit	0.99	0.98	0.02	0.92	0.80	Reliable
	Qualities	0.82	0.67	0.33			

Source: The results of data processing (2020).

The Quality of Investigation Audit (Quality) Variable: This endogenous variable is assessed using three dimensions and nine indicators. Figure 6 demonstrates that despite the factor loading values for all indicators being higher than 0.5, the RMSEA is still higher than 0.08. Furthermore, the results of re-specification in Figure 7 show RMSEA value below 0.08. To detail, the value of factor loading can be seen in Table 6.

Figure 6: CFA Test of Quality Variable (*Standardized*)

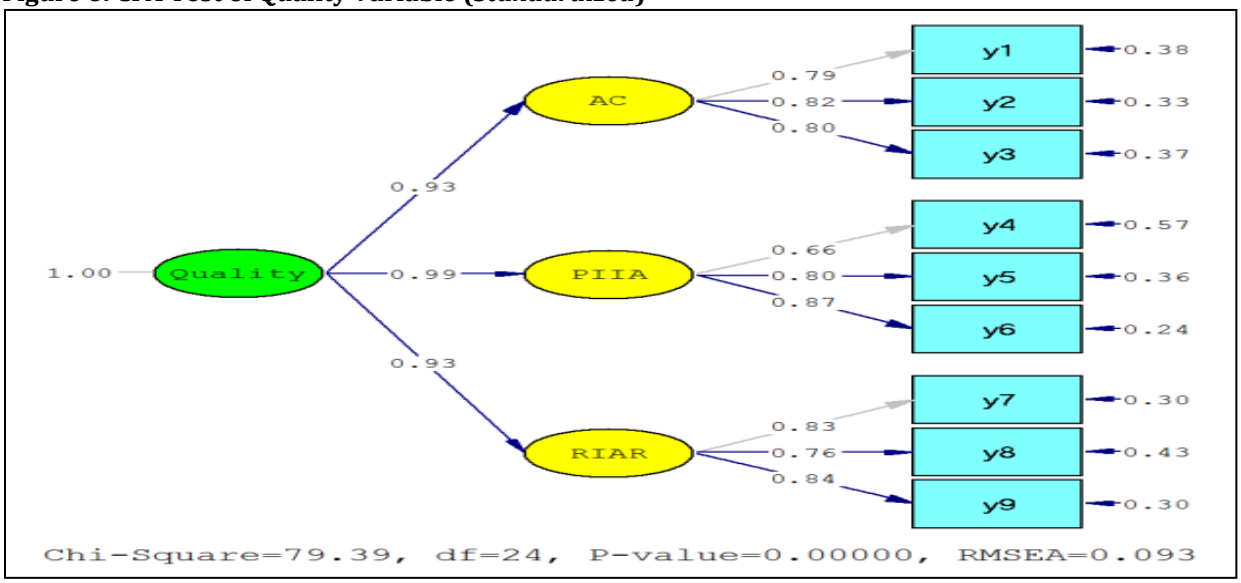

All of the indicators have factor loading above 0.5, according to Table 6, the results of the first-order test on the dimensions of AC, PIIA, and RIAR, indicate that all indicators are legitimate in measuring each dimension. It is reliable for all CR values over 0.7 and VE values above 0.5. This demonstrates that the indicators are consistent in their measurements of each dimension. All dimensions had factor loadings above 0.5 in the results of the second-order test on the quality variable, making them all legitimate for measuring the quality variable. As a result, the factor loading of the PIAA Dimension has the highest value, making it the strongest in reflecting Quality Variable, while the AC Dimension has the lowest value, making the dimension's ability to reflect the Quality Variable the weakest. As a result, it is dependable because the values of CR and VE are 0.90 and 0.97, respectively. This demonstrates the consistency with which the three dimensions measure the quality variable.

Figure 7: CFA Test of Re-Specification of Quality Variable (*Standardized*)

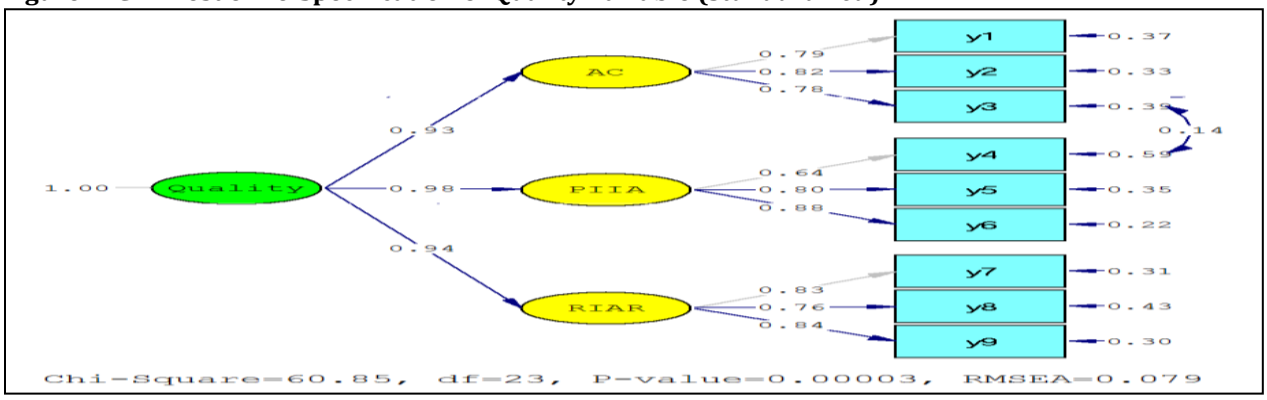

Table 6: Re-Specification of Quality Variable Validity and Reliability Test Results

Latent Variable	Indicator	λ	λ²	ε	CR	VE	Information
First Order							
AC (Auditor Competence)	y1	0.79	0.62	0.38	0.84	0.63	Reliable
	y2	0.82	0.67	0.33			
	y3	0.78	0.61	0.39			
PIIA (Process of Implementation Investigative Audit)	y4	0.64	0.41	0.59	0.82	0.61	Reliable
	y5	0.80	0.64	0.36			
	y6	0.88	0.77	0.23			
RIAR (Reporting of Investigative Audit Results)	y7	0.83	0.69	0.31	0.85	0.66	Reliable
	y8	0.76	0.58	0.42			
	y9	0.84	0.71	0.29			
Second Order							
Quality of Investigation Audit	AC	0.93	0.86	0.14	0.97	0.90	Reliable
	PIIA	0.98	0.96	0.04			
	RIAR	0.94	0.88	0.12			

Source: The results of data processing (2020).

Test Result of Full Structural Model: The evaluation findings of the fit model are discussed in this section, together with parameter estimates derived from the structural equation model. In this study, the theoretical model was used to construct the empirical model, which calls for thorough model testing. The whole structural model estimation was subsequently completed, as illustrated in Figure 8, after confirmatory component analysis for each latent variable.

Figure 8: Full Structural Model (*Standardized*)

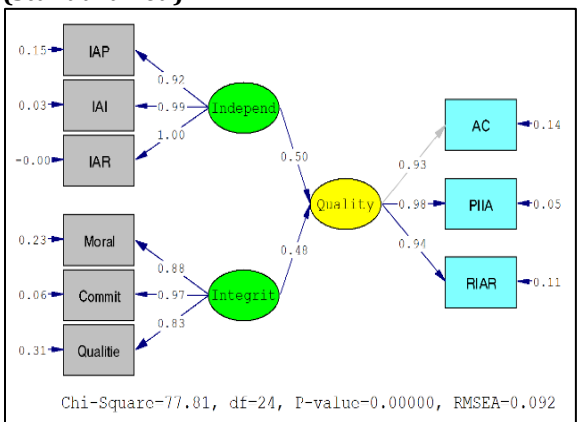

Figure 9: Re-specifications of Full Structural Model (*Standardized*)

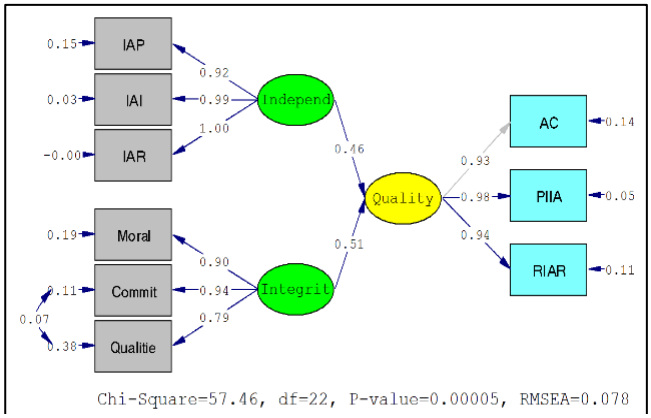

According to Figure 8, all indicators have factor loading values that are higher than 0.05 but still have RMSEA values that are higher than 0.08. For this reason, it is necessary to re-specification the Full Structural Model as shown in Figure 9. Furthermore, the results of the Lisrel based on the re-specifications of the Full Structural Model produce the structural equations mathematically: The Quality of Investigation Audit = 0.46 Independence + 0.51 Integrity + 0.16: Furthermore, to test the full model of SEM is done with 2 types of conformity model testing and model hypothesis testing. To determine the model's fairness or applicability, full SEM testing models are used. The values of recommended fit indexes, as shown in Table 7, are used to assess the adequacy of structural equation models.

Table 7: Evaluation of Indexes Fit of Re-specifications Full Structural Model

No.	Goodness of Fit	Target Value	Value	Description
1	*Chi-square (P-value)*	*expected small (≥ 0.05)*	57.46 (0.00005)	Small (Not Fit)
2	RMSEA	≤ 0.08	0.078	Fit
3	NFI	≥ 0.90	0.99	Fit
4	NNFI	≥ 0.90	0.99	Fit
5	CFI	≥ 0.90	0.99	Fit
6	IFI	≥ 0.90	0.99	Fit
7	RFI	≥ 0.90	0.98	Fit
8	SRMR	≤ 0.05	0.022	Fit
9	GFI	≥ 0.90	0.95	Fit
10	AGFI	≥ 0.90	0.91	Fit

Source: Results of Data Processing (2020).

Based on Table 7, the results of assessing the overall model's applicability can be noticed, except for P-value, practically all GoF indices meet the fit criteria, indicating that the analysis can proceed to the next step of testing the research hypotheses. While the summary of the results of the structural model estimation of the relationship between latent variables through the path coefficient test is presented in Table 8 as the Lisrel results are shown in Figure 10.

Figure 10: Re-Specifications of Full Structural Model (T-*values*)

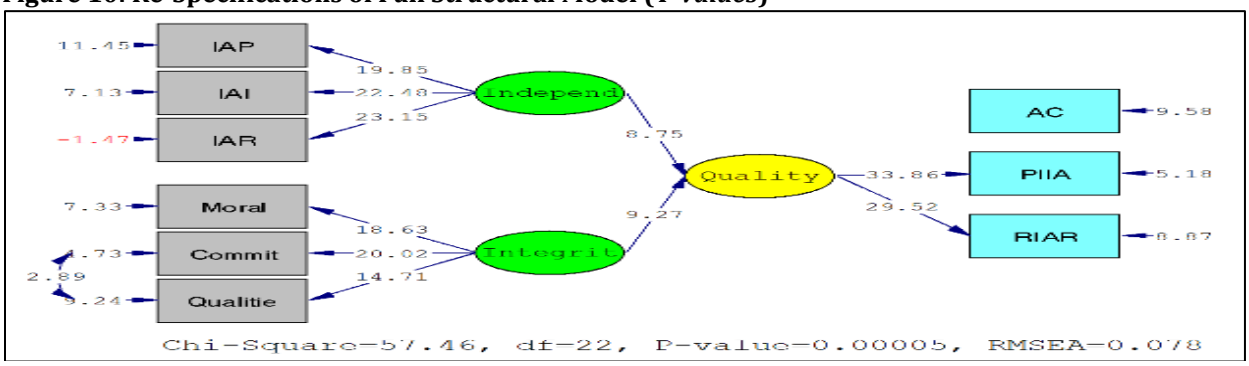

As can be observed from Table 8, the variables Independence and Integrity have an 84 percent influence on the Quality of Investigation Audit Variable. Other variables, in addition to the two independent variables, determine the remaining 16 percent. The most important factor affecting the quality of the investigation audit is integrity, which has a path value of 0.51; it is followed by independence, which has a path value of 0.46.

Table 8: Results of Path Coefficient Estimates and Statistical Tests

Relationship	Path Coefficient	T-value	R-square (Simultan)
Independ → Quality	0.46	8.75	0.84
Integrit → Quality	0.51	9.27	

Source: The results of data processing (2020).

Hypotheses Testing: The t-test statistics are used to test the hypothesis, and the findings are shown in Table 8. The results show that H0 is rejected if the t value is more than 1.96 or less than 1.96 for a value of 0.05 in the 95 percent confidence interval.

1) Hypothesis 1: The Influence of Independence on the Quality of Investigation Audit

$H_0 : \gamma_{11} = 0$	Independence has no influence on the Quality of the Investigation Audit
$H_1 : \gamma_{11}$ ¹ 0	Independence has an influence on the Quality of Investigation Audit
Lisrel Result	t_{value} = 8.75 then **H_0 Rejected and H_1 Accepted**

This finding shows that independence has a considerable favorable impact on investigation audit quality. The results are in line with previous studies, that Independence positively influences the Quality of Investigation Audit (DeAngelo, 1981; Chang & Monroe, 2001; Jamal & Sunder, 2011; Rivaldi, et al. 2022).

2) Hypothesis 2: The Influence of Integrity on the Quality of Investigation Audit

$H_0 : \gamma_{21} = 0$	Integrity has no influence on the Quality of the Investigation Audit
$H_1 : \gamma_{21}$ ¹ 0	Integrity has an influence on the Quality of Investigation Audit
Lisrel Result	t_{value} = 9.27 then **H_0 Rejected and H_1 Accepted**

This finding demonstrates that integrity has a considerable favorable impact on the quality of investigation audits. The results are in line with previous studies, that Integrity positively influences the Quality of Investigation Audit (Broberg, 2013; Bouhawia, Irianto & Baridwan, 2015, Susilo & Widyastuti, 2015).

5. Conclusion

Based on the phenomenon, problem formulation, hypotheses, and the results of research conducted on BPK, conclusions can be drawn as follows: Independence directly has a positive influence on the quality of investigation audit, thus the higher the Independence can increase the Quality of Investigation Audit. The auditor's independence in preparing an investigative audit program, determining methodology and audit methods, and determining the scope of the audit in the investigative audit aided this influence; Integrity directly has a positive influence on the quality of the investigation audit, so the higher the Integrity can increase the Quality of Investigation Audit. This influence is supported by the attitude of an auditor who has the values of honesty and fairness, open-mindedness, and a willingness to complete work. This study recommends investigating auditors to provide space for auditors to determine the scope, methodology and audit procedures, as well as avoid conflicts of interest while performing their duties. In addition, ensuring that auditors are given the freedom to disclose irregularities, the value of state losses, and disclose fraud-related parties in the investigation audit report. In addition, it also encourages auditors to apply the values of honesty and fairness, has an open mindset, and increase the auditor's ability to adapt to the environment. In addition, encourages auditors to increase their willingness and commitment in carrying out investigation audit engagements.

References

Akbar, R. J. (2014). Sering Dikomplain Lambat Audit Kasus, Ini Alasan BPK [Often complained of being slow in case examination, this is the reason of BPK]. Through https://www.viva.co.id/arsip/527826-sering-dikomplain-lambat-audit-kasus-ini-alasan-bpk [Accessed 31/07/19].

Arens, A. A., Elder, R. J. & Beasley, M. S. (2012). Auditing and Assurance Services: An Integrated Approach. 14th edition. Pearson Education Limited, Edinburg. UK.

Arens, A. A., Elder R. J., Beasley, M. S. & Hogan C. E. (2017). Auditing and Assurance Services: An Integrated Approach. 16th edition. Pearson Education, Inc. USA.

Arrunada, B. (1999). The Economics of Audit Quality: Private Incentives and the Regulation of Audit and Non-audit Services. 1st edition. Kluwer Academic Publisher, Boston. USA.

Bouhawia, M. S., Irianto, G. & Baridwan, Z. (2015). The Effect of Working Experience, Integrity, Competence, and Organizational Commitment on Audit Quality (Survey State Owned Companies in Libya. *Journal of Economics and Finance*, 6(4), 60-67.

BPK. (2015). Rencana Strategis 2016-2020 [The 2016-2020 Strategic Plan].

Broberg, P. (2013). The Auditor at Work – A Study of Auditor Practice in Big 4 Audit Firms. Doctoral Thesis. Lund University. Sweden. https://portal.research.lu.se/ws/files/6086199/3634005.pdf [Accessed 30/08/19].

Chang, M. & Monroe, G. S. (2001). The Impact of Reputation, Audit Contract Type, Tenure, Audit Fees, and Other Services on Auditors Perceptions of Audit Quality. Working Paper at the University of Western Australia. Newlands, W.A 6907.

DeAngelo, L. E. (1981). Auditor Size and Audit Quality. Journal of Accounting and Economics, Vol. 3: 183-199.

Edj. (2009). BPK Dilaporkan Ke Mabes Polri [BPK Reported to Police Headquarters]. Through https://nasional.kompas.com/read/2009/12/22/1333133/BPK.Dilaporkan.Ke.Mabes.Polri [Accessed 30/07/2019].

Elliott, R. K. & Jacobson, P. D. (1998). Audit Independence Concepts. *The CPA Journal*, 68, 12.

Fat. (2010). Dua Auditor BPK Jabar Divonis Empat Tahun Penjara [Two West Java BPK Auditors Sentenced to Four Years in Prison]. Through https://www.hukumonline.com/berita/baca/lt4cd784ca11ac3/dua-auditor-bpk-jabar-divonis-empat-tahun-penjara [Accessed 31/07/19]

Francis, J. R. (2004). What Do We Know About Audit Quality? *The British Accounting Review*, 36, 345-368.

Francis, J. R. (2011). A Framework for Understanding and Researching Audit Quality. *A Journal of Practice & Theory*, 30(2), 125-152.

FRC, (Financial Reporting Council). (2008). The Audit Quality Framework. Through https://www.frc.org.uk/getattachment/46582304-32b1-43bb-b614-90318b295f28/The-Audit-Quality-Framework-Feb-2008.pdf [Accessed 01/08/19].

GAO, (US. Government Accountability Office). (2003). Public Accounting Firm. Report No.GAO-03-864. Through https://www.gao.gov/new.items/d03864.pdf [Accessed 31/07/19].

Gabrillin, A. (2018). Auditor BPK Sigit Yugoharto Divonis 6 Tahun Penjara [BPK Auditor Sigit Yugoharto Sentenced to 6 Years in Prison]. Through https://nasional.kompas.com/read/2018/06/07/20481481/auditor-bpk-sigit-yugoharto-divonis-6-tahun-penjara [Accessed 31/07/19].

Gul, F. A., Wu, D. & Yang, Z. (2011). Do Individual Auditors Affect Audit Quality? Evidence from Archival Data. *THE ACCOUNTING REVIEW American Accounting Association,* 88(6). https://dx.doi.org/10.2139/ssrn.1888424

Hair, J. F., Sarstedt, M., Hopkins, L. & Kuppelwieser, V. G. (2014). Partial Least Squares Structural Equation Modeling (PLS-SEM): An Emerging Tool in Business Research. *European Business Review*, 26(2), 106–121.

Hayes, R., Dassen, R., Schilder, A. & Wallage, P. (2005). Principles of Auditing: An Introduction to International Standards on Auditing (2nd edition). Pearson Education, Essex. England.

ICAEW, (The Institute of Chartered Accountants in England and Wales). (2007). Reporting with Integrity Information for Better Markets Initiative. Through https://www.icaew.com/-/media/corporate/files/technical/ethics/reporting-with-integrity-report.ashx [Accessed 31/07/19].

IESBA, (International Ethics Standards Board for Accountants). (2014). Handbook of the Code of Ethics for Professional Accountants. Through http://iaiglobal.or.id/v03/files/ file_berita/2014-IESBA-Handbook.pdf [Accessed 31/07/2019].

Jamal, K. & Sunder, S. (2011). Is Mandated Independence Necessary for Audit Quality? *Accounting Organization and Society*, 36(4-5), 284-292.

Knechel, W. R., Krishnan, G. V., Pevzner M., Shefchik L. B. & Velury, U. K. (2012). Audit Quality: Insights from The Academic Literature. Auditing: *A Journal of Practice & Theory*, 32(1), 385-421.

Lee, S., Su, J. & Tsai, S. et al. (2016). A Comprehensive Survey of Government Auditors' Self-efficacy and Professional Development for Improving Audit Quality. *Springer Plus,* 5, 1263. https://doi.org/10.1186/s40064-016-2903-0

Lestari, D. (2012). AUDIT HAMBALANG: Menkeu Kaget, Fakta & Kesimpulan Tak Sinkron [HAMBALANG AUDIT: Minister of Finance Shocked, Facts & Conclusions Not Synchronized]. Through http://kabar24.bisnis.com/read/20121102/79/102786/audit-hambalang-menkeu-kaget-fakta-and-kesimpulan-tak-sinkron [Accessed 30/07/19].

Louwers, T. J., Ramsay, R. J., Sinason, D. H. & Strawser J. R. (2008). Auditing and Assurance Services. 3rd Edition. McGraw-Hill Companies, Inc. New York.

Mautz, R. K. & Sharaf, H. A. (1993). The Philosophy of Auditing, American Accounting Association, Florida.

Messier, G. & Prawitt. (2008). Auditing and Assurance service, a systematic approach. 6th edition. McGraw Hill. USA.

OECD, (Organization for Economic Co-operation and Development). (2009). Components of Integrity: Data and Benchmarks for Tracking Trends in Government. Global Forum on Public Governance

Patrick, Z., Vitalis, K. & Mdoom, I. (2017). Effect of Auditor Independence on Audit Quality: A Review of Literature. *International Journal of Business and Management Invention*, 6(3), 51-59.

Republik of Indonesia. (1945). Undang-Undang Dasar 1945 [The 1945 Constitution].

Republic of Indonesia. (2004). Undang-Undang Nomor 15 Tahun 2004 tentang Pemeriksaan Pengelolaan dan Tanggungjawab Keuangan Negara [Law No.15 of 2004 about Examining Management and Responsibility of State Finance].

Republic of Indonesia. (2006). Undang-Undang Nomor 15 Tahun 2006 tentang Badan Pemeriksa Keuangan [Law No.15 of 2006 about The Audit Board].

Rittenberg, L. E., Johnstone, K. M. & Gramling, A. A. (2010). The Public Accounting Profession: Auditing, A Business Risk Approach. 7th edition. South Western Cengage Learning, Mason. USA.

Rivaldi, A., Aswar, K., Taufik, T., Andreas, A. & Hariyani, E. (2022). Factors affecting audit quality: The moderating effect of dysfunctional behavior. *Universal Journal of Accounting and Finance*, 10(1), 358-366.

Sasongko, J. P. (2016). Pakar: Tak Ada 'Second Opinion' dalam Audit Investigasi BPK [Expert: There is no 'Second Opinion' in the BPK Investigation Audit]. Through https://www.cnnindonesia .com/nasional/20160416140940-12124341/ pakar-tak-ada-second-opinion-dalam-audit-investigasi-bpk [Accessed 30/07/19].

Sekaran, U. & Bougie, R. (2013). Research Methods for Business A Skill-Building Approach. 6th Edition. Chichester, West Sussex: Wiley.

Sembiring, L. J. (2017). PIDATO PRESIDEN: Dipuji Jokowi, Ini yang Telah Dilakukan Badan Pemeriksa Keuangan [PRESIDENTIAL SPEECH: Jokowi praised, this is what the Audit Board has done]. Through https://economy.okezone.com/read/2017/ 08/16/20/1756855/pidato-presiden-dipuji-jokowi-ini-yang-telah-dilakukan-badan-pemeriksa-keuangan [Accessed 31/07/19].

Susilo, P. A. & Widyastuti, T. (2015). Integritas, Objektivitas, Profesionalime Auditor dan Kualitas Audit di Kantor Akuntan Publik Jakarta Selatan [Integrity, Objectivity, Auditor Professionalism and Audit Quality in South Jakarta Public Accounting Firm]. *Jurnal Riset Akuntansi dan Perpajakan,* 2(1), 65-77.

Sutiawan, I. (2018). Syafruddin Nilai Audit BPK untuk Perkaranya, Menyimpang [Syafruddin, the BPK Audit Value for His Case, Deviated]. Through https://www.gatra.com/rubrik/ nasional/323424-Syafruddin-Nilai-Audit-BPK-untuk-Perkaranya-Menyimpang [Accessed 30/07/19].

Tanauma, R. (2012). Bahar dan Munzir Jalani Sidang Putusan [Bahar and Munzir Underwent a Judgment Session]. Through http://manado.tribunnews.com/2012/05/21/ bahar-dan-munzir-jalani-sidang-putusan [Accessed 31/07/19].

Wijanto, S. H. (2015). Metode Penelitian Menggunakan Structural Equation Modelling dengan Lisrel 9 [Research Methods Using Structural Equation Modeling with Lisrel 9]. Jakarta: Lembaga Penerbit Fakultas Ekonomi Universitas Indonesia.

Whittington, O. R. & Pany, K. (2011). Principles of Auditing and Other Assurance Services. 18th edition. The McGraw-Hill Companies Inc., International Edition. New York.