Information Management and Business Review (ISSN 2220-3796)
Vol. 15, No. 3, pp. 146-158, September 2023

Factorial Structure and Psychometric Validation of Social Media Intelligence Quotient (SMIQ) Scales among Graduates

*Nadhrathul Ain Ibrahim[1] & Rosidah Musa[2]
[1]Faculty of Business Management, Universiti Teknologi MARA (UiTM), Cawangan Selangor, Kampus Puncak Alam, Selangor, Malaysia
[2]City Graduate School, City University Malaysia, Petaling Jaya, Selangor, Malaysia
*nadhrathul@uitm.edu.my

Abstract: The Social Media Intelligence Quotient (SMIQ)'s underlying factorial structure will be extracted, and validated, and its psychometric properties will be examined in this study. Self-administered questionnaires from the universities that produce the most employable graduates in Malaysia, such as Universiti Malaya, Universiti Kebangsaan Malaysia, and Universiti Teknologi Mara, were utilized by the researcher to gather the data. It involved 352 final-year students from the Faculty of Business Management. To ascertain the factorial structure of the SMIQ, the researcher used the Exploratory Factor Analysis (EFA). Additionally, the confirmatory factorial analysis (CFA) was used to evaluate the psychometric characteristics of each item to confirm and validate it. A structural model was also developed to measure the nomological validity between social media dependency and SMIQ. It revealed that SMIQ is second order with three factorial structure constructs and met the psychometric criteria. Thus, the findings have essential implications for future research directions and the management of social media skills.

Keywords: *SMIQ, Social Media Literacy, Social Intelligence, Online Business Literacy*.

1. Introduction and Background

Pathological or excessive internet use (PIU) is now a widely recognized issue affecting people of all ages. This claim was supported by Kumar et al. (2019), who described how internet addiction can cause hyperactivity, sadness, social phobia, and aggression. As Luaran et al. (2012) pointed out, this phenomenon affects college students differently than secondary school students. College students can prioritize their attention better than teenagers when using the internet due to their mental maturity and degree of thought. According to Al-Adwan et al. (2020), students also engage in virtual learning. In the contemporary period, a wide range of information sources can be accessed over the internet to download notes, communicate, and do projects. Additionally, Garcia et al. (2020) noted how social media and internet use appear to be highly correlated with smartphone use since people utilize these platforms to conduct information searches and find solutions to their problems. The Malaysian Communication and Multimedia Commission (2020) announced that smartphone saturation in Malaysia reached 98.7% in 2020 during the Movement Control Order (MCO). Every household heavily relies on their smartphone to access their social media accounts and browse the internet. Since the school was closed for MCO, students must attend virtual classes, and all employees must work from home. During this pandemic, most activities, including conferences, seminars, lectures, and the acquisition of products and services, are organized online (Isa and Latif, 2020).

Half of the Gen Zs and Millennials surveyed in Deloitte (2023) Digital Media Trends Report said they saw online interactions as meaningful alternatives to real-world interactions, and nearly half said they spent more time on social media interacting with others than they did offline. Malaysian Communication & Multimedia Commission (2023) asserted the extension and quality improvement of 4G coverage, the launch of 5G Single Wholesale Network Providers, the availability of 5G, and the sunset of 3G are among the accomplishments of Jalinan Digital Negara (JENDELA) in 2021. Therefore, it expedites the number of social media usage in Malaysia. Undoubtedly, social media has also become a vital need for businesses since it provides a new and inexpensive way to boost brand exposure, reach more followers and stakeholders, and retain public interest (Loureiro & Lopes, 2019). A new habit and culture centered on social media must be the millennial generation's most popular buzzword (Bettman et al., 2020; Meade, 2013). Technology has transformed companies to change their business method in all departments including operational, administration, and marketing (Li et al., 2021; Meeker, 2015). Hence, Yost et al. (2021), Guenzi & Nijssen (2021) and Roza (2014) postulated social media can accelerate sales volume, and most of the company are seeking the right talent to enhance their business performance.

Therefore, it is anticipated that the study's results will contribute to changing the unfavorable perception of social media dependency through the Media System Dependency (MSD) theory. Li, O'Brien, Snyder and Howard (2015) suggested future research should determine the specific activities that students rely on social media sites and differentiate the effect of excessive social media use. Nevertheless, there is little empirical evidence in the literature that explicitly examines Social Media Intelligence Quotient (SMIQ). Therefore, there is a gap in empirically investigating the underlying factors that contribute to the formation of SMIQ. The knowledge of the underlying dimensional structure of SMIQ is critical in developing social media literacy, social intelligence and online business literacy.

2. Literature Review

As stated by van Deursen and van Dijk (2023), they discovered that IQ has a direct positive effect on education, economic, social, and cultural resources, as well as Internet attitude and skills. According to Gondal & Husain (2013), intelligent individuals have gained prominence owing to their ability to think critically and competently tackle challenges in their own lives. They had the mental capacity to figure out and comprehend the issues. People with high IQ scores frequently excel in school and have the necessary skills to adapt to social and technological change. This study borrows a well-known media theory, media system dependency (MSD), by Ball - Rokeach & DeFleur (1976). MSD theory is related to the factor of media dependence and its outcomes. Ball - Rokeach & DeFleur (1989) mentioned understanding, orientation and playing for human goals when applying the media. Subsequently, the positive outcomes of social media dependency are beneficial to producing more outstanding human capital in Malaysia. Neging, Musa, and Wahab (2013) expanded on this theory by including the Personality System to consider how different people experience media literacy's impacts in different ways. This theory is relevant for the study because the focus is on social media dependency and the effects and determinants are being investigated.

Apart from that, people who use the internet, mobile devices and social media tend to generate Information and Communication Technology skills among them (Gutiérrez-Martín & Tyner, 2012). According to Ibrahim, Musa & Adam (2016), the findings of the focus group session, persons with online business backgrounds have a lot of exposure to social media because they utilize it aggressively to launch and promote their products. Luqiu & Kang (2020) explained the MSD theory, presenting a useful analytical tool for traditional media use, which can shine a light on the numerous relationships that new media has with its audience. In summary, the SMIQ touch points are social media literacy (SML), online business literacy (OBL) and social intelligence (SI). Thus, in this paper, the researchers illustrate and confirm the factorial structure of SMIQ and validate the psychometric properties of the SMIQ scale. Hence, the researcher provided the measurement scales for SMIQ to strengthen the definition of SMIQ.

Social Media Intelligence Quotient (SMIQ): Jenkins (2008) introduced literacy skills in new media usage, including play, performance, simulation, multitasking, distributed cognition, collective intelligence, judgment, transmedia navigation, networking, negotiation, appropriation, and visualization. According to Jenkins (2008), millennials are engaging in more meaningful connections online, especially those who spend more time playing games. Their behaviors and routines will change, making them more willing to take chances, maintain their competitiveness, and maintain a healthy lifestyle. They dominate the usage of technology in classrooms. The game systems have influenced an increasing number of working-class houses. In our post-digital era, media literacy is essential for conceptualizing, developing, and understanding new kinds of intelligence that humans aspire to live harmoniously in the future (Jandri, 2019). Pangrazio & Cardozo-Gaibisso (2020) remarked in social media literacy, people are able to portray their digital identities on social media, utilize social media information and share it with other users and safeguard privacy in media by knowing what information to share and with whom.

Meijs et al. (2010) pointed out that social intelligence always has a major effect on popularity since a person with high social intelligence can change the group norms, which would impact academic accomplishment in the peer group. The most respected students in their colleges were those who excelled academically and were also sociable. A person with high social intelligence may also adapt themselves to new and diverse cultures (Dong, Koper & Collaço, 2008). In intercultural communications, they are concerned and interested in others, empathy and influence for acceptance and adaptation. As defined by Ebrahimpoor, Zahed and

Elyasi (2013), social intelligence has three main components; social information processing is the capacity for managing emotions. Social awareness includes an understanding of the desires, needs, and feelings of others and the application of that knowledge in decision-making and moral judgment. Social skills relate to an interest in getting performance judgment. Cultural intelligence was added as a subset of social intelligence by Kumar, Rose, and Subramaniam (2008) since it emphasized the cultural aspects that were not included in the social intelligence model.

Furthermore, those involved with online businesses spend more time on social media sites for their business pages to set up and manage their account and connect directly with their customers. Because of the emerging style of marketing through social media, social media is now adequately tied to the business scope. Therefore, a person with business abilities should notify social media platforms in running the marketing section on HTML, analytics, Microsoft Excel, virtual communication, mobile development, and database creation using online apps. Park et al. (2017) provided evidence in favor of the idea that social media users may change the information they gather and spark business opportunities to satisfy consumer demand. They are referred to as social media entrepreneurs since they identify profitable social media and run their businesses within those platforms (Girişimcilii, 2018). Thus, digital literacy has the greatest direct and indirect impact on the performance of Small and medium Enterprise (SME) entrepreneurs, providing guidance on performance development strategies through digital literacy, including digital business relationships, online facilities, and networks, and completing factors shaping SME performance in the digital age (Sariwulan et al., 2020).

Social Media Dependency: Internet Dependency Relations are defined by Patwardhan & Yang (2010) as persons who rely on the Internet to achieve their personal objectives in social life. The majority of prior research has suggested that internet dependence is comparable to internet addiction and pathological internet use. According to Thompson (1996), addiction occurs when individuals do not have their exciting desires when they are online. Meanwhile, dependency is defined as the user having a clear and specific goal on the internet. Dependence has been characterized by Wang, Lee, and Hua (2014) as the psychological impact of addiction. As a result, it suggests that dependence and addiction are not necessarily the same thing because high-dependency internet users may utilize the internet as a part of their profession and responsibilities rather than seizing the chances in life.

3. Research Methodology

The researchers applied the extant literature review and the methodological procedure suggested by Churchill (1979). The researchers designed a research methodology to develop, test and purify a scale to measure the SMIQ assessment of value derived as the effect of social media dependency. The SMIQ measures the graduates' IQ on social media literacy, social intelligence and online business literacy as the outcomes of social media dependency. The scales utilized in this study are the semantic differential scale (7-point scale), and the Likert scale (7-point scale: 1 = very strongly disagree to 7 = very strongly agree). The researchers organized this research at a few universities such as Universiti Kebangsaan Malaysia (UKM), Universiti Malaya (UM) and Universiti Teknologi Mara (UiTM) (Puncak Alam Branch). Apart from that, to help the researchers complete this investigation, a unit of analysis is needed because it becomes the target of the inquiry, such as individuals, groups, organizations, countries, objects and others (Bhattacherjee, 2012). Therefore, the researcher decided on the individual final semester students of UKM, UM and UiTM from the Faculty of Business Management for this study. NKEA highlighted the areas of Islamic Finance and Business and Science and innovation to enhance the number of quality Islamic finance and business specialists to provide the human capital needs of the other NKEAs (ETP, 2011). The researcher chose the graduates as the research's respondents to help our government produce great business analysts from those who possess a business management background. Indeed, this is important for Business Management students to have social media skills to help business practitioners become the leading players in the industries.

4. Results

Demographics Profile of Respondents: Table 1 indicates that females used social media higher than males, of which 59.7% are females, and 40.3% are males. Furthermore, the respondents' highest percentage is at age 23 – 25 years old (52.3%), and the students at age 20 – 22 gained 28.1%. Apart from that, Malay is dominant

in the race category, which involves 281 of the respondents (79.8%), followed by Chinese (9.7%), others (8%) and Indian (2.6%). The researcher also examined the duration of using social media separated into years and hours of using social media per day. 57.7% of respondents used social media for more than five years which indicates they were exposed to social media earlier in their life. The majority of the respondents use social media more than seven hours a day which represents 36.6% of the total population.

Table 1: Demographic Profiles of Respondent

Demographic Variables		Frequency	Percentage
Gender	Male	142	40.3
	Female	210	59.7
Age	20-22	99	28.1
	23-25	184	52.3
	26-28	56	15.9
	Above 29	13	3.7
Race	Malay	281	79.8
	Chinese	34	9.7
	Indian	9	2.6
	Others	28	8
Years using social media	Below 1 year	24	6.8
	1-2 Years	20	5.7
	2-3 Years	21	6
	3-4 Years	54	15.3
	4-5 Years	30	8.5
	More than 5 years	203	57.7
Hours using social media	Below 1 hour	23	6.5
	1-3 Hours	57	16.2
	3-5 Hours	72	20.5
	5-7 Hours	71	20.2
	More than 7 hours	129	36.6

Exploratory Factor Analysis: The objective of exploratory factor analysis is to find a set of underlying latent constructs, which a group of items might represent. The researchers conducted the exploratory factor analysis using maximum likelihood estimation to assess the dimensionality of the scales. The EFA used principal components extraction with varimax rotation. It is the most commonly used analytical technique for reducing a large item pool to a more manageable set. It is a valuable preliminary analysis when no sufficient theory is available to establish the underlying dimensions of a specific construct, as recommended by Gerbing and Anderson (1988). The researchers removed the items with low factor loadings (< 0.5) or high cross-loadings (> 0.3), and EFA was performed again as recommended by Hair et al. (2010). Tables 3, 4 and 5 proved the EFA value for the measurement items.

Table 2: Measurement Items of SMIQ

Items	Items Label	Items Deleted
Create a photo collage and compile it together with video clips on my Instagram account.	SML1	Deleted
Incorporate a playlist on YouTube to enable others to find all relevant videos on the topic of interest.	SML2	Deleted
Record lessons and post them to YouTube.	SML3	Deleted
Create interactive videos by adding quizzes and comments to them.	SML4	Deleted
Do collaboration assignments online.	SML5	Deleted
Enjoy the collaborative activities online (Wikipedia, team games, online fan communities, community message boards)	SML6	Deleted
Connect and collaborate with others to help me in solving my queries	SML7	Deleted
Use community boards on Pinterest for group projects to combine the resources in one place.	SML8	Deleted
Judge online information whether it is correct or not.	SML9	Deleted
Judge and quickly screenshot helpful information.	SML10	Deleted
Gather information from various sources and judge it.	SML11	Deleted
Follow my favorite entertainment across different social media platforms.	SML12	
Visit the websites (official or fan-created) of my favorite TV shows, bands, etc.	SML13	Deleted
Check online if I am curious about something I saw on TV.	SML14	
Learn about my interest in various media (TV, YouTube, Wikipedia, Pinterest, Instagram).	SML15	
Prepare coursework using images, graphs and diagrams. (Slideshare, Google Image).	SML16	
Use information from images, graphs, diagrams and other visual tools.	SML17	Deleted
Visualize and navigate the location by using Google Maps or Waze.	SML18	
Understand things better from videos on YouTube.	SML19	
Able to understand other people better.	SI1	
Able to predict other people's behavior from their social media posts.	SI2	
Able to evaluate my posts on how social media will make others feel.	SI3	
Able to predict how others will react to my posts.	SI4	
Comfortable with new friends on my social networking sites.	SI5	Deleted
Able to stay in touch with my friends on social media besides real life.	SI6	Deleted
Able to fit easily in online community conversations.	SI7	
Creating a social profile and sending a message to my online friends.	SI8	
Creating professional networking all over the world.	SI9	
Interacting virtually with people from all over the world.	SI10	
Exploring many new things of other cultures around the world.	SI11	
More open to other cultures around the world.	SI12	
Facebook Analytics is helpful to promote the products/ services to your target audience (market targeting).	OBL1	
Facebook Analytics allows marketers to monitor the company page and fans.	OBL2	
Google Analytics can track the number of actual visitors visiting your website and blog.	OBL3	
Google Analytics can track where visitors come.	OBL4	
Google Analytics can track how long the visitors stay on the website.	OBL5	
CTR (Clicks/Impressions) is calculated by dividing the number of times the ad is shown.	OBL6	
Google Ads will charge fees only if users watch your videos. (Pay Per Click)	OBL7	
Mentioning the price of product or service in the ad text is recommended by Google.	OBL8	Deleted
In setting the FB Ads budget, one can choose the daily budget.	OBL9	Deleted

Table 3: Exploratory Factor Analysis of Social Media Literacy

Items	Transmedia Visualization
Follow my favorite entertainment across different social media platforms.	.775
Check online if I am curious about something I saw on TV.	.800
Learn about my interest in various media (TV, YouTube, Wikipedia, Pinterest, Instagram)	.828
Prepare coursework using images, graphs and diagrams. (Slideshare, Google Image)	.817
Visualize and navigate the location by using Google Maps or Waze)	.786
Understand things better from videos on YouTube.	.773
Eigenvalues	**3.809**
Total variance explained	**63.677**
Cronbach's Alpha	**0.884**

Table 4: Exploratory Factor Analysis for Social Intelligence

Items	Social Intelligence
Able to understand other people better.	.731
Able to predict other people's behavior from their social media posts.	.695
Able to evaluate my posts on how social media will make others feel.	.768
Able to predict how others will react to my posts.	.678
Able to fit easily in online community conversations.	.754
Creating a social profile and sending a message to my online friends.	.750
Creating professional networking all over the world.	.788
Interacting virtually with people from all over the world.	.653
Exploring many new things of other cultures around the world.	.736
More open to other cultures around the world.	.718
Eigenvalues	**5.301**
Total variance explained	**53.011%**
Cronbach's Alpha	**0.900**

Table 5: Exploratory Factor Analysis for Online Business Literacy

Items	Online Business Literacy
Facebook Analytics is helpful to promote the products/ services to your target audience (market targeting).	.870
Facebook Analytics allows marketers to monitor the company page and fans.	.900
Google Analytics can track the number of actual visitors visiting your website and blog.	.920
Google Analytics can track where the visitors come from.	.920
Google Analytics can trace how long the visitors stay on the website.	.910
CTR (Clicks/Impressions) is calculated by dividing the number of times the ad is shown.	.840
Google Ads will charge fees only if users actually watch your videos. (Pay Per Click)	.820
Eigenvalues	**5.450**
Percentage of variance explained	**77.790**
Cronbach's Alpha	**0.700**

The researchers performed the first EFA to assess the factor structure of the SMIQ measurement scale, which comprises Social Media Literacy: 19 items, Social Intelligence: 12 items and Online Business Literacy: 10 items. However, this initial purification exercise resulted in the deletion items failing to fulfil the criteria mentioned earlier. The loadings also presented a clean and highly interpretable solution, a 'simple structure' according to Bitner & Brown (2000). The results reveal social media literacy: Bartlett test of sphericity (3736.878 at p = 0.001) and the Kaiser-Mayer-Olkin measure of sampling adequacy (KMO = 0.903), social intelligence: Bartlett test of sphericity (1921.231 at p = 0.001) and the Kaiser-Mayer-Olkin measure of sampling adequacy (KMO = 0.883), online business literacy: Bartlett test of sphericity (2535.259 at p = 0.001) and the Kaiser-Mayer-Olkin measure of sampling adequacy (KMO = 0.918). These indicate that there was a sufficient inter-item correlation with the data for performing factor analysis. Sharma (1996) suggests that the cut-off level for the Kaiser-Mayer statistic should be greater than 0.8 but that a value of 0.6 is tolerable.

Confirmatory Factor Analysis: Gerbing and Anderson (1988) argued that item-total correlation, alpha coefficient, and exploratory factor analysis (EFA) procedures could not ensure the unidimensionality of measures, which is an essential requirement of valid measurement. They strongly recommend that a more rigorous statistical method refine and confirm the factor structure generated from the initial EFA. Confirmatory factor analysis (CFA) is an analytical tool to ascertain the unidimensionality of measures. Hence, in line with this suggestion, all the resulting factor structures derived from EFA were tested and validated by confirmatory factor analysis (CFA) analytic procedure, which tests a priori factor structure and goodness of fit of the resulting solution (Kline, 1998). To achieve an acceptable ratio of observations to estimate parameters, it proved necessary to run two separate measurement models: SMIQ and SMD. The first measurement model consists of the SMIQ construct, which comprises of three-factor solution. The appropriateness of the measurement model described by CFA was assessed using the chi-square statistic, a set of relative fit indices. A significant chi-square statistic indicates a lack of fit between the data and the model.

However, a highly restrictive test required by chi-square statistic mostly leads to rejection of the proposed model. Hence, most researchers will resort to other absolute and relative fit indices to infer the validity of the proposed model. The Goodness of Fit Index (GFI) is analogous to squared multiple correlations (R2) in multiple regressions. The comparative fit index (CFI) indicates the model's overall fit relative to a null model, and the Normed Fit Index (NFI) adjusts for the complexity of the model. These fit measures are close to 0.90, the recommended cut-off criterion (Bollen, 1989). Root means square error of approximation (RMSEA) indicates the approximation of the observed model to the actual model, with lower RMSEA suggesting a better model. The model fit results support a 15-item, 3-dimensional scale for SMIQ. Figure 1 visually presents the factorial structure of SMIQ and illustrates each indicator's path coefficient on the corresponding factor. The results of the first measurement model are as follows: the fit statistics were $\chi 2 = 273.156$, df = 86, $\chi 2$ /df = 3.18, p< 0.001; GFI = 0.902; TLI = 0.930; CFI = 0.941; NFI = 0.920 and RMSEA = 0.079. All indicators loaded heavily on the factor/dimension have t-values greater than 7.73 and all standardized coefficients are greater than 0.50. The results are illustrated in Figure 1 below.

Table 6 presents the results of the three dimensions of the SMIQ measurement model, including correlation matrix, Cronbach's alpha, composite reliability, and Average Variance Extracted (AVE). Construct reliability was also assessed by estimating the AVE, reflecting the overall variance captured by the latent construct and Composite Reliability (CR). CR reflects the internal consistency of the construct indicators, while AVE demonstrates the amount of variance charged by the construct indicators (Lemke, Clark & Wilson, 2010). All CR scores ranging from 0.804 – 0.853 were much higher than the recommended cut-off point of 0.7 (Olorunniwo, Hsu & Udo, 2006). Thus, each of the factors reliably measured its respective constructs. The AVE scores ranged from 0.560 to 0.755, exceeding the recommended cut-off point of 0.5 as suggested by Fornell and Larcker (1981). Construct validity was assessed in terms of convergent and discriminant validity. Convergent validity is established through high correlations between the measure of interest and other measures supposedly measuring the same concept (Aaker, Kumar, Day, 2007). The critical ratio (t-value) of the items in the two measurement models exceeds ± 1.96 or ± 2.58 at 0.05 or 0.01 levels, respectively and standardized factor loading of 0.5 and above. In the present study, discriminant validity is achieved as the correlation coefficients range from 0.048 to 0.869. In addition, for a rigorous test of discriminant validity, the AVE of each construct was computed and found to be greater than the squared correlation between the

construct and any other constructs in the model (Table 6) as recommended by Fornell and Larcker, (1981). A complimentary assessment of discriminant validity determines whether a confidence interval of (± two standard errors) around the correlation estimated for each pair of constructs includes one suggested by Anderson and Gerbing (1988). The result illustrates that this criterion has been achieved satisfactorily. In conclusion, it is reasonable to claim that all the measures used in the study possess good psychometric properties.

Figure 1: The Output Path Diagram for SMIQ Measurement Model

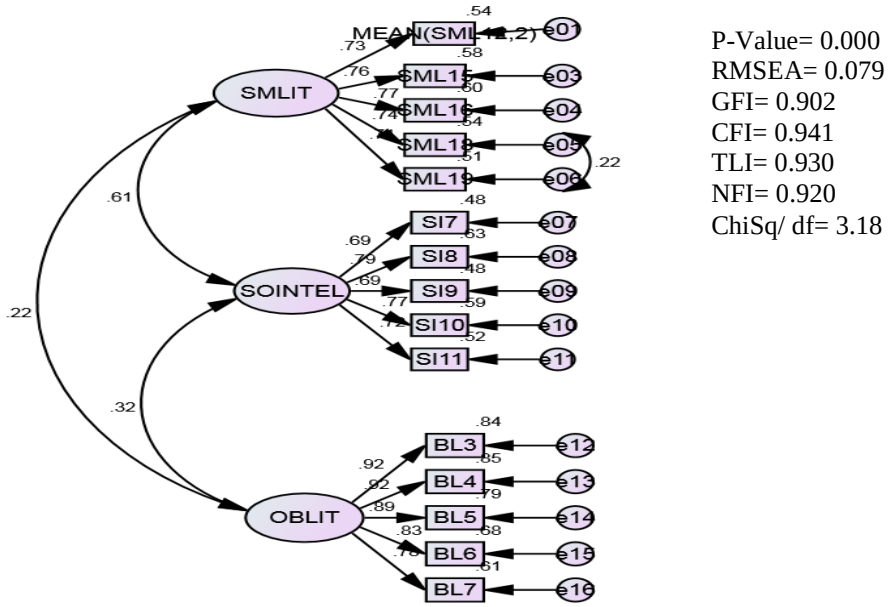

Table 6: Correlation and AVE Extracted Estimates of Latent Constructs

	SMD	SMLIT	SOINTEL	OBLIT
SMD	**0.812**			
SMLIT	0.458	**0.748**		
SOINTEL	0.455	0.572	**0.76**	
OBLIT	0.048	0.209	0.25	**0.869**
CR	0.853	0.864	0.804	0.939
AVE	0.660	0.560	0.579	0.755
Cronbach's Alpha	0.885	0.863	0.798	0.938

Table 5 illustrates the results of the three dimensions of the SMIQ measurement model, including correlation matrix, Cronbach's alpha, composite reliability, and Average Variance Extracted (AVE). Construct reliability was also assessed by estimating the AVE, reflecting the overall variance captured by the latent construct and Composite Reliability (CR). CR reflects the internal consistency of the construct indicators, while AVE demonstrates the amount of variance charged by the construct indicators (Lemke, Clark & Wilson, 2010). All CR scores ranging from 0.804 – 0.853 were much higher than the recommended cut-off point of 0.7 (Olorunniwo, Hsu & Udo, 2006). Thus, each of the factors reliably measured its respective constructs. The AVE scores ranged from 0.560 to 0.755, exceeding the recommended cut-off point of 0.5 as suggested by Fornell and Larcker (1981). Construct validity was assessed in terms of convergent and discriminant validity. Convergent validity is established through high correlations between the measure of interest and other measures supposedly measuring the same concept (Aaker, Kumar, Day, 2007). The critical ratio (t-value) of the items in the two measurement models exceeds ± 1.96 or ± 2.58 at 0.05 or 0.01 levels, respectively and

standardized factor loading of 0.5 and above. In the present study, discriminant validity is achieved as the correlation coefficients range from 0.048 to 0.869. In addition, for a rigorous test of discriminant validity, the AVE of each construct was computed and found to be greater than the squared correlation between the construct and any other constructs in the model (Table 6) as recommended by Fornell and Larcker, (1981). A complimentary assessment of discriminant validity determines whether a confidence interval of (± two standard errors) around the correlation estimated for each pair of constructs includes one suggested by Anderson and Gerbing (1988). The result illustrates that this criterion has been achieved satisfactorily. In conclusion, it is reasonable to claim that all the measures used in the study possess good psychometric properties.

Testing an Alternative Model: second-order three-factor model of SMIQ: The first-order model of SMIQ implies that the three main factors, social media literacy, social intelligence, and online business literacy, are correlated but governed by a common latent factor. Alternatively, the SMIQ model may be operationalized as a second-order model, of which a higher-order factor governs the three factors, i.e. Social Media Intelligence Quotient. The researcher applied Confirmatory factor analysis to assess if the SMIQ model has a higher-order construct explained by several related dimensions. This procedure was an effort to achieve strong validity and reliability (Browne & Cudek, 1993) (Omar & Musa, 2011). As shown in Figure 2, the second-order standardized factor loadings of the SMIQ Model are 0.70 for social media literacy, 0.91 for social intelligence and 0.31 for online business literacy. The overall model statistics for the SMIQ second-order model fit well with the data. The fit statistics were $\chi 2$ (101) = 294.363, p< 0.001, $\chi 2$ /df = 2.914, GFI = 0.903; TLI = 0.934; CFI = 0.945; NFI = 0.919 and RMSEA = 0.074. All indicators loaded heavily on the factor/dimension have t-values greater than 7.73, and all standardized coefficients are greater than 0.50. The results support a 16-item, 3- dimensional scale for SMIQ.

Figure 2: Results of Confirmatory Factor Analysis for the Second-Order Three-Factor Model of SMIQ

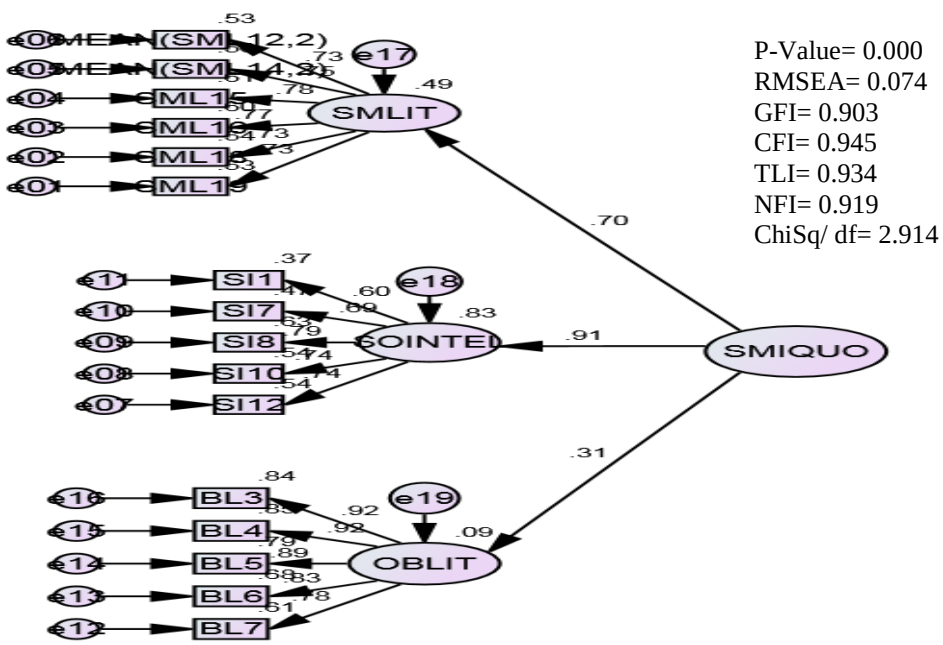

Table 7: Comparison of Overall Fit Indices of Two Models of SMI

Model	$\chi 2$	df	$\chi 2$ / df	GFI	CFI	NFI	TLI	RMSEA	$\Delta \chi 2$
First Order- 3-factor model	273.156	86	3.18	0.902	0.941`	0.920	0.930	0.079	
Second Order- 3-factor model	294.363	101	2.914	0.903	0.945	0.919	0.934	0.074	16.266

Table 7 demonstrates the overall fit indices for the first-order and second-order SMIQ models. The results imply that both models fit the data satisfactorily. However, the second-order three-factor model outperformed the first-order three-factor model. The χ 2 difference test indicates that the improvement in fit between the first-order and second-order three-factor model of SMIQ was statistically significant, Δ χ 2 (3)16.266, p<0.001. This result indicates that the second-order model outperformed the first-order model, and provides the best representation of data in this study.

Figure 3: Measurement Model for SMD

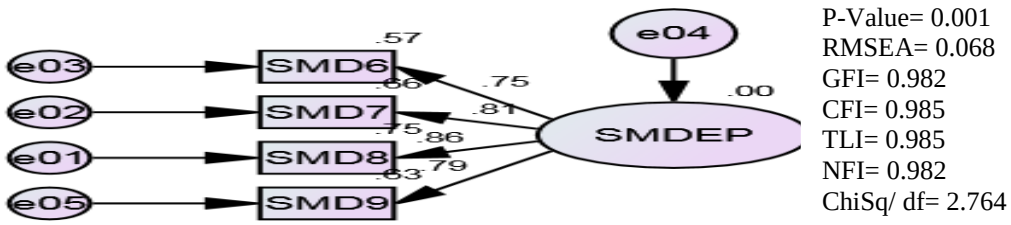

Figure 3 illustrates the factorial structure of the second measurement model visually. To achieve an acceptable ratio of observations to estimate parameters, running a second measurement model for SMD proved necessary. The fit indices suggest that the model fits the data well. The SMD measurement model is of a two-factor structure consisting of single indicators for social media dependency. All four items loaded heavily on their respective factors and the standardized coefficients are more significant than 0.50, above the recommended level of 0.5 by Bagozzi and Yi (1988). Therefore, the researchers retained all four items for nomological validity assessment using structural equation modelling subsequently. AVE: 0.66, CR: 0.853 and Cronbach's alpha: 0.812.

Figure 4: Nomological Validity Assessment using Structural Equation Modelling

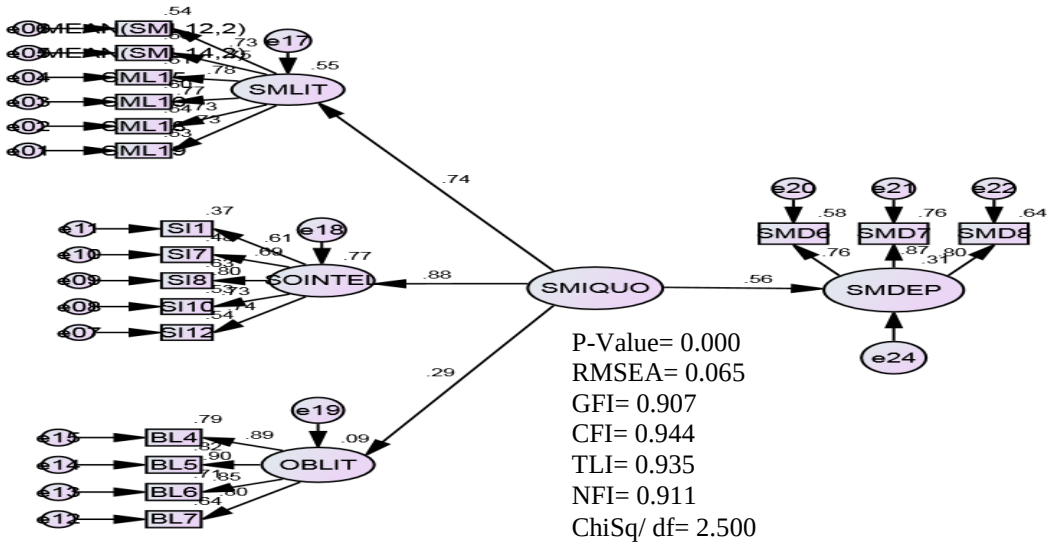

The present study relies on its capability to explain the relationship of SMIQ with another construct to establish the nomological validity of the SMIQ scale. The researchers provided evidence of the nomological validity of the SMIQ scale by testing the structural relationships between SMIQ and the consequence construct, SMD. The results of the analysis are presented diagrammatically in Figure 4. The researchers test the structural model by transferring the second-order model of SMIQ (Figure 2) to the first-order model via the model of "parcelling" (Figure 4). The result was achieved by using composite scores for each dimension, calculated by averaging the items measuring each dimension of SMIQ. The results of the overall fit of the structural model were good (χ 2 = 327.494, df = 131, χ 2 /df = 2.500, GFI = 0.907; TLI = 0.935; CFI = 0.944;

NFI = 0.911 and RMSEA = 0.065. More importantly, the path coefficient for the effect of SMIQ on SMD was significant (β = 0.637; t =8.246; p<0.01). The estimates substantiate the nomological validity of SMIQ.

5. Conclusion

In the first step, EFA was used to confirm the latent and composite constructs' unidimensionality, and CFA was used to aggregate the items and give evidence of construct dimensionality. According to Anderson & Gerbin (1988), CFA was employed to enhance and validate the factorial structure produced by EFA. To determine whether the constructs in this study are consistent with the researcher's knowledge of the underlying latent construct established during the EFA level, CFA was conducted. The results of this research afford three significant contributions. First, EFA illustrates the factor structure or dimensionality of the SMIQ construct. Three factors comprised: social media literacy, social intelligence and online business literacy. By performing EFA, the researcher refined 23 items of the SMIQ scale from 41 items. CFA provides a more rigorous estimation than EFA, suggesting that 8 items have been dropped to improve the model fit. The final SMIQ construct comprises 15 items. The 15-item construct is a reliable and valid measure to determine the underlying factorial structure of SMIQ. Second, convergent validity and discriminant validity were upheld by factor loadings and correlations between CFA model factors. Subsequently, CFA establishes that the second-order three-factor model of SMIQ provides the best representation of the data in this research inquiry. This study provides evidence that the SMIQ construct is multidimensional and of hierarchical structure.

In essence, there is proof that the SMIQ has acceptable psychometric properties and is a multidimensional construct that is consistent with the other research. Additionally, SMIQ might be a useful tool for graduates to hone their social media skills. Future researchers need to confirm the findings using respondents with varied backgrounds and from different geographical locations. In evaluating the experience side of consumption, the research design that relies on questionnaires and statistical methods of analysis is frequently criticized. Through a qualitative research approach, such as in-depth interviews and focus group discussions in future studies, the preliminary investigation may reveal significant insights. Investigating the impact of SMIQ on social media influencers through a longitudinal research design is an attractive direction for future study. Perhaps, this potential research endeavor could afford more insightful findings.

References

Al-Adwan, A., Albelbisi, N., Aladwan, S., Horani, O., Al-Madadha, A. & Khasawneh, M. (2020). Investigating the Impact of Social Media Use on Student's Perception of Academic Performance in Higher Education: Evidence from Jordan. *J. Inf. Technol. Educ. Res,* 19, 953-975. https://doi.org/10.28945/4661.

Anderson, J. C. & Gerbing, D. W. (1988). Structural equation modelling in practice: A review and recommended two-step approach. *Psychological Bulletin,* 103(3), 411–423. https://doi.org/10.1037/0033-2909.103.3.411

Aaker, D. A., Kumar, V. & Day, G. S. (2007). Marketing Research (Ninth Edition), John Wiley & Sons.

Bagozzi, R. P. & Yi, Y. (1988). On The Evaluation of Structure Equations Models, *Academic of Marketing Science,* 16(1), 76–94.

Ball-Rokeach, S. J. & De Fleur, Melvin, L. (1989). Theories of mass communication. 5th Ed. New York: Longman.

Ball-Rokeach, S. J. (1998). A theory of media power and a theory of media use: Different stories, questions, and ways of thinking. *Mass Communication and Society*, 1(1), 5–40.

Bettmann, J., Anstadt, G., Casselman, B. & Ganesh, K. (2020). Young Adult Depression and Anxiety Linked to Social Media Use: Assessment and Treatment. Clinical Social Work Journal, 1-12. https://doi.org/10.1007/s10615-020-00752-1.

Bitner, M. J. & Brown, S. W. (2000). Technology Infusion in Service Encounters, *Journal of Academy of Marketing Science*, 28(1), 138-149.

Bollen, K. A. (1989). Structural Equations with Latent Variables, Wiley, New York, NY.

Browne, M. & Cudek, R. (1993). Alternative Ways of Assessing Model Fit.

Bollen, K. & Long, J. (1993). Testing Structural Equation Models, Sage, Newbury Park, CA, pp. 136-162.

Churchill, G. A. (1979). Paradigm For Developing Better Measures of Marketing Constructs, *Journal of Marketing Research*, XV1, 64-73.

Deloitte Insight (2023). 2023 Digital media trends: Immersed and connected. Accessed on 25th August 2023 from https://www2.deloitte.com/us/en/insights/industry/technology/media-industry-trends-2023.htm

Dong, Q., Koper, R., J., Collaco, C., M., (2008). Connections using social networks and social intelligence of students. *Intercultural Communication Studies XVII, 17*(2), 162-172.

Ebrahimpoor, H., Zahed A. & Elyasi, A. (2013). The Study of Relationship Between Social Intelligence and Organizational Performance, Case Study: Ardabil Regional Water Company's Managers.

Fornell, C. & Larcker, D. F. (1981). Evaluating Structural Equation Models With Unobservable Variables And Measurement Error, *Journal of Marketing Research*, 18, 39-50.

Girişimciliği, S. M. (2018). Social Media Entrepreneurship, Journal of Social Science.

Guenzi, P. & Nijssen, E. (2020). Studying the antecedents and outcome of social media use by salespeople using a MOA framework. *Industrial Marketing Management*, 90, 346 - 359. https://doi.org/10.1016/j.indmarman.2020.08.005.

Hair, J., Babin W, B. & Anderson, R. (2010). Multivariate Data Analysis Prentice-Hall Upper Saddle River, NJ.

Ibrahim, N. A., Musa, R. & Adam, A. A. (2016). Social Media Intelligence Quotient (SMIQ) Among Graduates: Knowledge Gathering from Focus Group with Graduates. *Procedia Economics and Finance,* 37, 304-308.

Isa, K. & Latiff, A. A. (2020). Internet Browsing Trends among Malaysians during Movement Control Order (MCO) Period, *International Journal of Emerging Technologies in Engineering Research (IJETER)*, 8(4), 1 – 9.

Garcia, M. G., Varela, R. S., Marchena, J. A. M. & Espejo, M. J. P. (2020). Using Mobile Devices for Educational Purposes in Compulsory Secondary Education to Improve Student's Learning Achievements.

Gondal, U. H. & Husain, T. (2013). A Comparative Study of Intelligence Quotient and Emotional Intelligence: *Effect on Employees' Performance*, 5(1), 153–162.

Gerbing, D. W. & Hamilton, J. G. (1996). Viability of exploratory factor analysis as a precursor to confirmatory factor analysis. *Structural Equation Modelling*, 3(1), 62-72.

Jaffar, B. A., Riaz, S. & Mushtaq, A. (2019). Living in a Moment: Impact of TikTok on Influencing Younger Generation into Micro-Fame, *Journal of Content, Community & Communication,* 10, 187-194.

Jandrić, P. (2019). The Post Digital Challenge of Critical Media Literacy. The International Journal of Critical Media Literacy. https://doi.org/10.1163/25900110-00101002.

Jenkins, H., Clinton, K., Purushatma, R., Robison, A. & Weigel, M. (2006). Confronting the challenges of a participatory culture: Media education for the 21st century. Chicago, IL: MacArthur Foundation

Kumar, N., Kumar, A., Mahto, S., Kandpal, M., Deshpande, S. & Tanwar, P. (2019). Prevalence of excessive internet use and its correlation with associated psychopathology in 11th and 12th grade students. General Psychiatry, 32. https://doi.org/10.1136/gpsych-2018-100001.

Kumar, N., Rose, R., C., Subramaniam (2008). The bond between intelligence: Cultural, emotional, and social, performance improvement, *47*(10), 42-48.

Li, H., Wu, Y., Cao, D. & Wang, Y. (2021). Organizational mindfulness towards digital transformation as a prerequisite of information processing capability to achieve market agility. Journal of Business Research, 122, 700-712. https://doi.org/10.1016/j.jbusres.2019.10.036.

Li, W., O'Brien, J. E., Snyder, S. M. & Howard, M. O. (2015). Characteristics of Internet Addiction/Pathological Internet Use in U.S. University Students: A Qualitative-Method Investigation. *PLoS ONE,* 10(2), e0117372.

Loureiro, S. & Lopes, J. (2019). How corporate social responsibility initiatives in social media affect awareness and customer engagement. *Journal of Promotion Management,* 25, 419 - 438. https://doi.org/10.1080/10496491.2019.1557819.

Luaran, J. E., Abdul, F. S., Rom, K. B. M. & Nadzr, F. A. (2012). Hooked on the Internet: how does it influence the quality of undergraduate student's academic performance.

Luqiu, L. & Kang, Y. (2021). Loyalty to WeChat beyond national borders: a perspective of media system dependency theory on techno-nationalism. *Chinese Journal of Communication,* 14, 451 - 468. https://doi.org/10.1080/17544750.2021.1921820.

Malaysian Communication & Multimedia Commission. (2023). Digital Connectivity: Ensuring Everyone Gets Connected: A Glance at Malaysia's Digital Connectivity Journey. Accessed on 25th August 2023 from https://www.mcmc.gov.my/skmmgovmy/media/General/pdf2/Insight-Digital-Connectivity.pdf

Malaysian Communication and Multimedia Commission. (2020). Internet Users Survey 2020.

Meeker, M. (2015). Internet Trends 2015 – *Code Conference*.

Meijs, N., Cillesen, A., H., N., Scholte, R., H., J., Segers, E., Spijkerman, R., (2010). Social intelligence and academic achievement as predictors of adolescent popularity. *Journal Of Youth And Adolescence*, *39*(1), 62-72.

Neging, P., Musa, R. & Wahab, R. A. (2013). The Determinants and Outcomes of Pathological Internet Use (PIU) among Urban Millennial Teens : A Theoretical Framework, 211–217.

Olorunniwo, F., Hsu, M. K. & Udo, G. J. (2006). Service quality, customer satisfaction, and behavioral intentions in the service factory, *Journal of Services Marketing*, 20(1), 59-72.

Omar, N. A. & Musa, R. (2011). Measuring service quality in retail loyalty programs (LPSQual): Implications for retailers' retention strategies, *International Journal of Retail & Distribution Management,* 39(10), 759-783.

Pangrazio, L. & Cardozo-Gaibisso, L. (2020). Beyond cyber safety: The need to develop social media literacies in pre-teens. *Digit. Educ. Rev,* 37, 49–63.

Park, Y. J., Sung, C. S. & Im, I. (2017). Does Social Media Use Influence Entrepreneurial Opportunity? A Review of its Moderating Role.

Patwardhan, P. & Yang, J. (2010). Internet Dependency Relations and Online Consumer Behaviour: *A Media System Dependency Theory Perspective on Why People Shop, Chat, And Read News Online*, 3(2), 57–69.

Roza, A. (2014). Maximizing social media to engage your current and future workforce.

Sariwulan, T., Suparno, S., Disman, D., Ahman, E. & Suwatno, S. (2020). Entrepreneurial Performance: The Role of Literacy and Skills. *Journal of Asian Finance, Economics and Business,* 7, 269-280. https://doi.org/10.13106/jafeb.2020.vol7.no11.269.

Sharma, S. (1996). Applied Multivariate Techniques. John Wiley and Sons Inc., New York.

Thompson, S. J. (1996), Internet Connectivity: Addiction and Dependency Study.

van Deursen, A. J., van Dijk, J. A. (2023). IQ and digital inequality: An empirical investigation. *New Media & Society*, *25*(6), 1248–1270. https://doi.org/10.1177/14614448211024012

Wang, C., Lee, M. K. O. & Hua, Z. (2015). A Theory of Social Media Dependence: Evidence from Microblog Users. *Decision Support Systems*, 69, 40–49.

Yost, E., Zhang, T. & Qi, R. (2021). The power of engagement: Understanding active social media engagement and the impact on sales in the hospitality industry. *Journal of Hospitality and Tourism Management,* 46, 83-95. https://doi.org/10.1016/j.jhtm.2020.10.008.

Zhou, L. & Wang, T. (2014). Social Media: A New Vehicle for City Marketing In China. *Cities*, 37, 27–32.