Information Management and Business Review (ISSN 2220-3796)
Vol. 15, No. 3, pp. 405-417, September 2023

Enhancing Small and Medium Enterprise Performance through Supply Chain Integration: A Case Study of Malaysia

Nurul Azlinda Chek Talib*, Noraznira Abd Razak & Nurazree Mahmud
Faculty of Business & Management, Universiti Teknologi MARA, Cawangan Melaka Kampus Bandaraya Melaka, Melaka, Malaysia
azlindatalib@uitm.edu.my*, noraznira@uitm.edu.my, nurazree642@uitm.edu.my

Abstract: This conceptual paper aims to explore the significant impact of Supply Chain Integration (SCI) on the performance of Small and Medium Enterprises (SMEs) in Malaysia. The paper outlines the key elements of SCI, its importance in today's globalized business environment, and how it can be tailored to meet the unique challenges faced by SMEs in the Malaysian context. By analyzing existing literature and incorporating case studies, this paper provides insights into the potential benefits and challenges of implementing SCI strategies for SMEs in Malaysia. Additionally, it suggests recommendations for policymakers, industry practitioners, and academics to further promote SCI adoption among SMEs in Malaysia.

Keywords: *Supply Chain Integration, Supply Chain Management, Supply chain disruption, Small Medium Enterprise (SME), SME performance.*

1. Introduction

Small Medium Enterprise (SME): In an era marked by unprecedented interconnectivity and economic integration, Small and Medium Enterprises (SMEs) play a pivotal role in driving innovation, employment, job creation, reducing inequalities, and economic growth. These dynamic entities, often characterized by their flexibility and adaptability, form the backbone of many economies worldwide. However, the contemporary business landscape is not devoid of challenges, and SMEs are particularly vulnerable to the far-reaching effects of global issues. The intricate network of global markets and the intricacies of international trade mean that SMEs are intricately linked to countless global challenges, ranging from economic downturns and geopolitical tensions to health crises to war crises (Jagtap et al., 2022), lack of technology, and environmental disruptions. These challenges have evolved and continue to persist, affecting SMEs worldwide.

In the context of the global landscape, small and medium-sized enterprises (SMEs) constitute nearly 99% of the companies in Europe. These SMEs together employ an estimated 95 million individuals, spread throughout a network of over 25 million enterprises inside the European Union during the year 2018. Small and medium-sized enterprises (SMEs) are widely acknowledged as highly vulnerable actors within the value chains of the European Union (EU), primarily because of their significant involvement in sectors that have been severely impacted by the ongoing epidemic. The industries most significantly affected by the lockdown measures implemented by the authorities include tourism, transportation, food, and fashion (SME Corporation Malaysia, 2020). Approximately 58% of small and medium-sized enterprises (SMEs) in Germany saw a decrease in their turnover. Similarly, in the Netherlands, 58% of SMEs had financial challenges as a consequence of the COVID-19 pandemic. In Belgium, 40% of SMEs reported a substantial dip of 75% or more in their revenue. Furthermore, in Portugal, 37% of SMEs suffered a reduction of over 50% in their industrial output.

The conflict in Ukraine is expected to impede global economic development and exacerbate inflationary pressures, introducing a fresh adverse supply shock to the international economy. This comes at a time when certain supply-chain difficulties observed since the onset of the epidemic seemed to be diminishing. The ramifications of the war will manifest via several avenues and are expected to change should the conflict escalate. In the foreseeable future, several governments will be required to mitigate the impact of elevated energy costs, enhance energy source variety, and maximize efficiency to the greatest extent feasible. Consequently, this phenomenon gives rise to suboptimal operational outcomes for organizations, particularly those classified as small and medium-sized (Jagtap et al., 2022; Ngoc et al., 2022).

Small Medium Enterprise (SME) in Malaysian Context: Malaysia, like many other nations globally, has had significant repercussions in both its economic and health sectors as a result of the widespread impact. During

the initial quarter of 2020, there has been a noticeable downward slope in Malaysia's economic activity. This can be attributed to the stringent measures implemented by the Malaysian government, which entailed a comprehensive lockdown strategy commencing on March 18, 2020. The government has implemented a variety of steps to prevent the transmission of the Covid-19 virus (National Entrepreneur and SME Development Council, 2020b). As a consequence, numerous sectors, such as manufacturing and services, have experienced a decline in their operations.

Figure 1: Performance of SMEs GDP, 2020

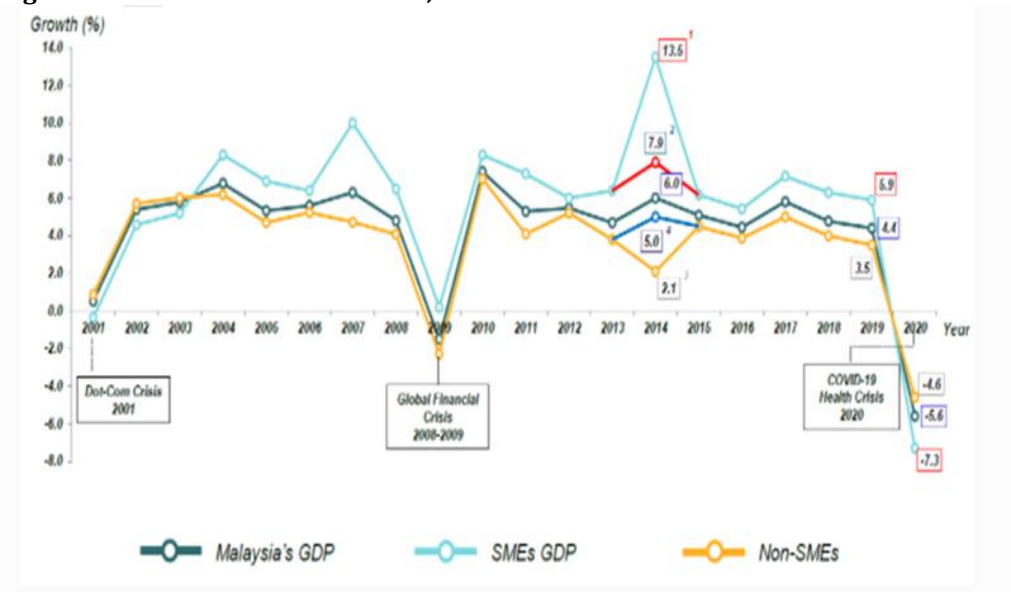

Sources: Department of Statistics, (2021)

According to the Department of Statistics, (2021), there was a notable decrease of 7.3% in the Gross Domestic Product (GDP) of Small and Medium Enterprises (SMEs) in the year 2020 as compared to the preceding year, 2019. Despite the implementation of several governmental strategies to address the health issue, the prolonged duration of the COVID-19 pandemic has significantly undermined Malaysia's economic sectors, particularly the business and operations of small and medium-sized enterprises (SMEs). In 2020, the small and medium-sized enterprise (SME) sector had a decline in nominal GDP, amounting to RM512.8 billion. This is a decrease of 38.2% compared to the previous year's figure of RM533.5 billion, which accounted for a 38.9% share of the GDP. This occurrence is the initial instance on record in which the performance of small and medium enterprises (SMEs) has fallen below both Malaysia's gross domestic product (GDP) and the GDP of non-SMEs since the year 2004. In 2020, there was a contraction in the Gross Domestic Product (GDP) of Small and Medium Enterprises (SMEs) across all sectors. Specifically, the value of SMEs in the services sector experienced a decline of around 9.2% in 2020, following a growth rate of 7.5% in 2019 (Department of Statistics, 2021).

Based on a survey conducted by Maybank between September and December 2021, it was found that respondents encountered various business challenges as a consequence of economic disruption. The most prevalent factors affecting businesses were a decline in demand, delays in receivables, and difficulties in obtaining supplies, as reported by The Star, (2021). The primary sectors surveyed, including wholesale and retail trade, real estate, manufacturing, and construction, reported varying impacts on their sales. Specifically, 61% of respondents experienced a decline in sales, 25% observed no change in sales, and 14% reported an increase in sales. The survey was undertaken to comprehensively comprehend the effects of MCO3.0 on small and medium-sized enterprise (SME) clients and their business operations, encompassing their supply chain activities.

The Malaysian government has recognized the importance of sustainable development and has taken a proactive approach towards achieving the Sustainable Development Goals (SDGs) outlined by the United

Nations. In 2015, Malaysia adopted the 2030 Agenda for Sustainable Development, which includes 17 SDGs and 169 targets (Official Portal of Ministry of Economy, 2021). SDGs comprise a set of goals aimed at achieving a better and sustainable future for all. They address global challenges we face, including poverty, inequality, climate change, environmental degradation, security, and justice. SDGs consist of 17 interrelated goals that are crucial to be achieved by the year 2030 (Jabatan Perangkaan Malaysia, 2019; Shayan et al., 2022). Various initiatives have been pointed out to achieve the SDGs, including the development of SDG indicators, providing a framework for monitoring and evaluating progress towards achieving the SDGs (Yahya, 2021). As an effort to achieve sustainable development, the Malaysian government has committed to the 2030 Agenda for Sustainable Development known as DKN2030.

DKN2030 and SDGs are two important initiatives that are interlinked in the effort to achieve sustainable development. DKN 2030 represents the first policy document released by the recently established Ministry of Entrepreneur Development (MED). This initiative aligns with the Ministry's core responsibilities of crafting policies that foster the growth of an all-encompassing and competitive entrepreneurial community, with a specific focus on the small and medium-sized enterprise (SME) sector. Following the Government's shared prosperity concept, DKN 2030 seeks to expand the number of qualified, viable, and resilient entrepreneurs and to strengthen the capacities of local entrepreneurs, particularly in the SME sector. This initiative is particularly crucial in light of the escalating rivalry and challenges arising from Industry 4.0 (SME Corporation Malaysia, 2023). While larger corporations possess significant capital and financial resources that enable them to achieve strategic competitiveness and dominance within the market, small and medium-sized enterprises (SMEs) have greater constraints and are more vulnerable in their struggle for survival (Jaharuddin et al., 2016). Therefore, all Small and medium-sized enterprises (SMEs) in Malaysia must implement differentiated strategies to navigate the challenges posed by the "new normal." This involves embracing digitalization to enhance their business operations, formulating business continuity plans, and establishing close collaborations with financial institutions to effectively manage their cash positions amidst the ongoing COVID-19 pandemic. Furthermore, SMEs must also address globally related issues such as conflicts, diminishing food supplies, geopolitical tensions, and other pertinent factors that significantly impact their operations, particularly in the area of supply chain management.

Ou et al. (2010) claimed that supply chain management (SCM) has been recognized to be positively associated with enhanced competitiveness and improved firm performance, and has a huge impact on firm performance in manufacturing industries. The field of supply chain management has been evolving fast. Currently, it focuses on internal integration, as both supplier and client seek to reach high levels of performance (Kauppi et al., 2016). The competition has forced organizations to enhance their capabilities for delivery, reliability, and product flexibility in response to customer needs. Thus, SCM provides benefits to suppliers and customers by enhancing upstream and downstream linkages. SCM system facilitates inter-enterprise cooperation and collaboration with suppliers, customers, and business partners. Although this system can bring benefits and competitive advantages to organizations, the management and implementation of this system pose significant challenges to organizations. Process integration and redesign are important components of SCM implementations, (Awad & Nassar, 2010).

Although there is a prevalent consensus that supply chain integration (SCI) contributes to enhanced performance, numerous studies have extensively investigated the correlation between SCI and performance. These studies contend that SCI has a positive influence on performance, as evidenced by the works of Mostaghel et al., (2015); Tsanos, Zografos and Harrison, (2014); Mellat-Parast and Spillan, (2014); Parast and Subramanian, (2020) and Danese and Romano, (2011, 2013). Several studies have yielded inconclusive results regarding the aforementioned relationship (Flynn, Huo and Zhao, (2010); Schoenherr and Swink, (2012). Additionally, a recent study conducted by Som, Cobblah and Anyigba, (2019) discovered that the integration of information and operations positively influenced supply chain performance, whereas relational integration had a detrimental impact on supply chain performance. In the rapidly evolving global business landscape, Malaysian SMEs find themselves navigating a complex supply chain ecosystem characterized by heightened competition, technological advancements, and shifting consumer demands. As a response, the concept of Supply Chain Integration (SCI) has gained paramount importance, as it offers a holistic approach to streamlining operations, enhancing customer satisfaction, and driving sustainable growth.

Hence, the primary objective of this study is to investigate the impact of Supply Chain Integration (SCI) on the performance of Small and Medium Enterprises (SMEs). This study aims to investigate the supply chain integration variables of customer integration, internal integration, and supplier integration, and determine if there exists a positive relationship between supply chain integration (SCI) and small and medium enterprise (SME) performance in the context of Malaysia.

2. Supply Chain Integration Concept and Definition Literature

Supply chain management focuses on integration, cooperation, and coordination throughout the value chain" (Stank, Keller, & Closs, 2001; Stank, Keller, & Daugherty, 2001). Supply chain integration (SCI) can be defined as the extent to which a company strategically interconnects and aligns its supply chain with its partners, upstream and downstream (Jayaram et al., 2010; Schoenherr & Swink, 2012). The integration of supply chains operates based on principles such as collaboration, shared decision-making, open communication, shared vision, shared technology, and a high level of trust between producers and their customers (Flynn et al., 2010). The level of strategic collaboration between a manufacturer and its supply chain partners is a determinant of the effectiveness and efficiency of product and service flows, ultimately aiming to deliver optimal value to the customer.

Supply chain integration (SCI) is now one of the most difficult tasks for contemporary management in the global market. Cooperation among supply chain partners can take many forms, ranging from framework contracts for supplies to joint forecasting and planning, reserve concentration, and collaboration in the design and launch of new products or essential components. The success of these processes provides clear financial advantages to each of the partners, resulting in powerful supply chains capable of competing worldwide (Cyplik & Adamczak, 2015). The study conducted by Alfalla-Luque et al., (2013) focused on the development of a framework for supply chain integration through a comprehensive evaluation of existing literature. The researchers identified information integration, coordination, resource sharing, and organizational relationship linking as the fundamental components that underlie effective supply chain integration. The adoption of this procedure or technique into the organizational culture is essential.

Kim (2009) investigated the relationship between a firm's supply chain integration approach and its competitive strategy. Supply chain integration was discovered to mediate the association between supply chain management practices and company performance. Furthermore, supply chain management practices and supply chain integration influence each other and ultimately mediate the relationship with firm performance. Internal and external integration were found to have positive effects on performance in the Chinese manufacturing sector, according to Flynn et al. (2010) who examined the effects of supply chain integration on the flow of materials and goods among supply chain partners and the accuracy of demand forecasting. Antecedents of supply chain integration are the extent to which all organizational activities, activities of suppliers, customers, and other supply chain partner members are integrated with achieving the objectives of each company. Customer and supplier integration is often referred to as external integration, which is the level at which companies work together with external partners to develop strategies between organizations, practices, and collaborative processes achieving synchronization (Stank, Keller, & Closs, 2001). Customer integration involves core competencies derived from the results of coordination with customers, while supplier integration involves core competencies related to coordination with major suppliers (Kim, 2006).

Customer Integration: The integration of customers allows organizations to effectively utilize knowledge derived from inter-organizational activities, hence facilitating the development of an in-depth understanding of market opportunities. The implementation of customer integration strategies facilitates prompt responsiveness to client demands, leading to enhanced levels of customer service, reduced inventory holding costs, and ultimately, heightened profitability for enterprises (Aslam et al., 2023). The activities of customers inevitably involve the sharing of information about products and services, receiving customer orders, engaging with consumers to handle requests, communicating order status with customers during the scheduling process, and providing information throughout the product delivery phase (Belvedere & Grando, 2017). Customer integration is crucial for SMEs to improve their performance and profitability. By engaging with key customers and understanding their needs, SMEs can become more responsive to customer

requirements, improve customer service levels, and increase overall profitability. Customer integration also helps SMEs develop an accurate understanding of market prospects, leading to superior performance outcomes.

The study conducted by Ataseven & Nair, (2017) revealed a positive association between customer integration and financial performance, whereas no significant correlation was observed with operational performance. Agyei-owusu et al. (2022) discovered empirically that customer integration has a favorable and significant effect on operational and financial performance. Prior empirical studies have also demonstrated a positive correlation between increased degrees of customer integration and enhanced firm performance (Flynn et al., 2010; Hendijani & Saeidi Saei, 2020). However, a contrasting outcome is shown in the study conducted by Hamilton-Ibama et al., (2021), wherein it is suggested that there is a lack of association between customer integration and organizational success. This finding suggests that the influence of customer integration on firm performance may not be significant. Therefore, the formulation of the hypotheses is as follows:
H1: There is a positive relationship between Customer Integration and SME performance

Internal Integration: Internal integration pertains to the various activities that occur within a manufacturing organization. The level to which a manufacturer organizes its organizational strategies, practices, and processes into collaborative and synchronized processes, to meet the needs of its customers (Cespedes, 1996; (Kahn & Mentzer, 1996; Kingman-brundage et al., 2010) and effectively engage with its suppliers. The functions of internal integration and external integration within the framework of supply chain integration are distinct from one another. Internal integration refers to the dynamic process through which different functional departments within an organization interact, collaborate, coordinate, communicate, and cooperate, ultimately leading to the establishment of a unified and coherent organizational structure (Flynn et al., 2010; Zhao et al., 2011). According to Lee et al., (2007) and Belvedere & Grando, (2017), internal integration is related to the establishment of information linkages among various departments within an organization. This facilitates the accessibility of information about the management of service products, the development of easily accessible integrated data sources encompassing crucial operational data, the integration of operational processes through information systems, and the connection between production and marketing departments through digital planning systems.

In previous research conducted by Ataseven & Nair, (2017), an examination was undertaken to explore the fundamental elements of integration concerning various aspects of performance. The findings of this study revealed a favorable correlation between internal integration and both financial performance and operational performance. According to the findings of (Sabet et al., 2017; Chen et al., 2023), there exists a direct and positive correlation between internal integration and performance.

This finding suggests that the internal integration of a corporation has a beneficial impact on several performance indicators, including financial performance, productivity, and customer satisfaction (Han et al., 2013; Munir et al., 2020). Numerous studies also have demonstrated that the implementation of internal integration strategies fosters enhanced coordination and collaboration within an organization, particularly among disparate jobs. This, in turn, leads to improved performance outcomes for the firm. According to Pakurár et al. (2019), Song & Song (2020), and Agyei-owusu et al. (2022) conducted a study that yielded comparable findings, demonstrating a substantial positive relationship between internal integration and both supplier integration and customer integration.

The impact of internal integration on the performance of small and medium-sized enterprises (SMEs) is favorable and significant. Internal integration acts as the fundamental basis for external integration, which in turn influences performance (Amoako et al., 2022). Furthermore, it can be argued that the attainment of optimal firm performance by internally integrated enterprises requires the use of external integration strategies. Therefore, the establishment of the hypotheses is as follows:
H2: There is a positive relationship between Internal Integration and SME performance.

Supplier Integration: The concept of supplier integration is centered around the imperative of acquiring materials necessary for efficient operations promptly, ensuring that the resources are of appropriate amount and quality and that they are delivered to the correct location, all while maintaining affordable costs (He et al.,

2014; Vanpoucke et al., 2017). Zimmermann & Foerstl (2014) conducted a thorough meta-analytic investigation to examine the associations between supplier integration, a constituent of purchasing-supply management (PSM) practices, and firm performance. Their findings revealed that supplier integration displays the most substantial influence on the operational performance of the focal firm, surpassing the effects on market and financial performance.

The contemporary business landscape is characterized by heightened levels of difficulty and competition, prompting organizations to engage in strategic efforts to gain a competitive edge across several industry sectors (Zhao et al., 2011). Nevertheless, numerous organizations continue to encounter challenges while attempting to compete in the market solely through internal resources and their core capabilities. Hence, enterprises must engage in collaborative efforts with both suppliers and customers to get supplementary knowledge and resources that may be effectively utilized to establish a competitive edge. Supplier integration is an important component of supply chain integration (SCI), which is recognized as an avenue through which firms achieve sustainable competitive advantage (Amoako-gyampah et al., 2019).
According to Van Echtelt et al. (2008), supplier integration encompasses a range of elements and practices. These include the sharing of information, coordination between parties, fostering trust, utilization of shared technology, implementation of integrated processes, establishment of long-term contracts, support for supplier improvement in production processes, driving quality improvement, investment in supplier assets, such as the development of new service products, enhancing the overall capabilities of partner suppliers, sharing risks and rewards, and deriving mutual benefits from collaborative efforts within the integrated supply chain. In recent research that re-evaluated the performance implications of Supply chain integration with firm performance, Wiengarten et al., (2019) found that supplier and customer integration have generally positive impacts on operational performance. These findings were revealed as a result of re-evaluating the performance implications of Supply chain integration with firm performance.

Several academic studies have demonstrated that supplier integration has a positive impact on both operational performance (Frohlich & Westbrook, 2001; Gimenez & Ventura, 2003; Flynn et al., 2010; Liu et al., (2013) and company performance (Taouab & Issor, 2019; Zhang & Huo, 2013; Schoenherr & Swink, 2012). However, (Schoenherr & Swink, 2012) presented a contrasting finding, stating that the integration of suppliers did not yield improvements in operational performance or financial performance. Therefore, the formulation of the hypotheses is as follows:
H3: There is a positive relationship between Supplier Integration and SMEs performance

SME Performance: The contribution of small and medium-sized enterprises (SMEs) to the Malaysian economy may be observed by their impact on output and value-added, as noted by Aris (2007)). According to the most recent data available in the Malaysia Statistical Business Register (MSBR) as of September 2023, the total count of small and medium enterprises (SMEs) registered in Malaysia in the year 2021 amounted to 1,173,601 which accounted for approximately 97.4 percent of the overall number of business establishments. This figure represents a notable increase of over 87,068 enterprises in comparison to the total count of 1,086,533 MSMEs recorded in 2016. Consequently, this growth signifies an annual growth rate of 5.2 percent over the span of six years (SME Corporation Malaysia, 2022).

Table 1: SME Performance in Malaysia

	SMEs GDP	SMEs Export	SMEs Employment
SME Performance in 2020	RM512.8 bil. (38.2% share)	RM 117.8 bil (13.5% share)	7.25 mil workers (48.0% share)
SME Performance in 2019	RM553.5 bil. (38.9% share)	RM176.3 bil (17.9% share)	7.3 mil workers (48.4% share)

Source: (National Entrepreneur and SME Development Council, 2020a)

The percentage of Small and Medium Enterprises (SMEs) in the overall Gross Domestic Product (GDP) decreased from 38.9% in 2019 to 38.2% in 2020. The reduction in contribution amounted to RM512.8

billion in 2020, as reported by the Department of Statistics, (2021). Concerning employment, there has been a decrease in the proportion of employment, with a reduction from 48.4 percent in 2019 to 48 percent in 2020. Despite the challenges posed by the COVID-19 epidemic, small and medium enterprises (SMEs) continue to make significant contributions to Malaysia's gross domestic product (GDP). The impact of SMEs extends beyond mere insignificance, as they have emerged as crucial catalysts for both employment generation and economic expansion.

3. The Research Gaps

Although previous studies have examined the relationship between supply chain integration (SCI) and its effects on small and medium-sized firms (SMEs), there is a lack of research specifically investigating the role of SCI in improving SME performance within emerging markets (Dhillon et al., 2023; Chen et al., 2023), such as the case of Malaysia. The influence of governmental assistance in mitigating the effects of structural change-induced shocks on small and medium-sized enterprise (SME) performance within developing economies: Previous research has examined the effects of SCI on the performance of small and medium-sized enterprises (SMEs), but there is a lack of studies exploring the influence of government support in mitigating the impact of SCI on SME performance in emerging economies (Chen et al., 2023). Several scholarly investigations have been conducted to examine the influence of supply chain integration (SCI) on the performance of small and medium-sized enterprises (SMEs). However, there exists a study gap about the effects of SCI on the sustainability performance of SMEs operating in developing markets (Despoudi et al., 2023). The failure rate of small and medium enterprises (SMEs) in Malaysia is an issue of concern since research indicates that around 60% of newly established SMEs experience failure within five years. Research findings reveal that around 60% of newly founded SMEs encounter failure within five years. Furthermore, it is worth mentioning that only 40% of small and medium-sized firms (SMEs) possess the capability to adequately overcome the challenges that emerge throughout the process of expansion. The challenges encountered by small and medium companies (SMEs) in attaining growth have consistently presented obstacles within the framework of this country (Ambad et al., 2020)

Conceptual Framework

Figure 2: Conceptual Framework

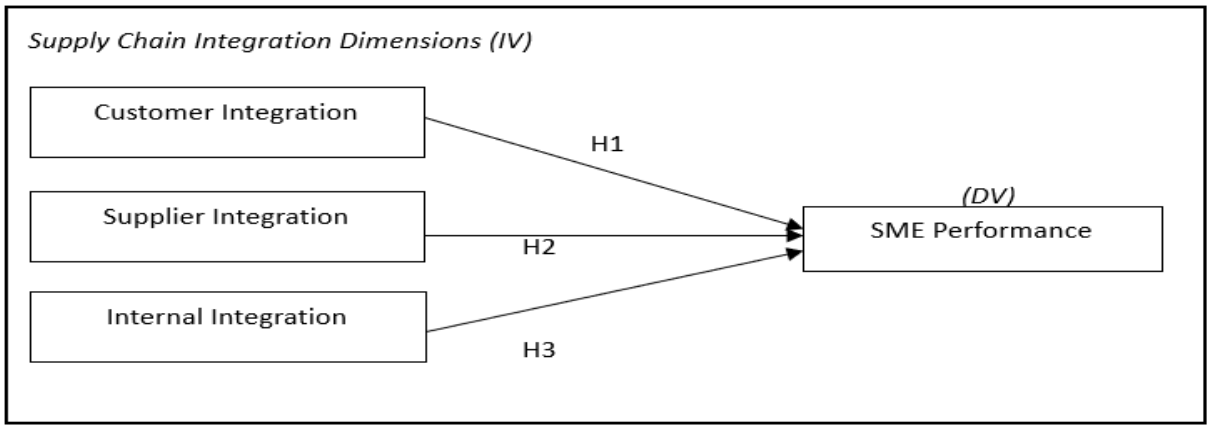

Sources: (Flynn et al., 2010; Alfalla-Luque et al., 2013)

Based on the arguments undertaken in the literature, this study underlines a conceptual research framework as shown in Figure 1 which contains paths from supply chain integration to SME performance, and finally, the research hypotheses are developed.

4. Proposed Methodology

The study intends to employ a quantitative research technique to collect complete data that meets the goals of the study. This method is often considered the best for conducting large-scale research since the results of a

thoroughly completed statistical analysis are more dependable for establishing generalizations. However, the methodologies that most successfully handle the practical requirements of a certain inquiry are used to decide the research design and execution tactics.

The conceptualization of Small and Medium Enterprises (SMEs) exhibits variation across different nations. In the Malaysian context, the classification of small and medium companies (SMEs) is established based on two primary criteria: the yearly sales turnover and the number of full-time workers. According to the rules outlined by SME Corporation Malaysia (2020), the classification of a business as a small and medium-sized firm (SME) within its specific industry is determined by either its yearly sales turnover or the number of full-time workers it has. Small and medium-sized enterprises (SMEs) have been seen as a catalyst for prospective economic expansion. The National Entrepreneur and SME Development Council (2020) highlights the various benefits that small and medium-sized firms (SMEs) provide to the country. These advantages encompass the generation of employment opportunities, the enhancement of income levels, and the facilitation of economic growth.

Table 2: Definition of Small Medium Enterprise (SME)

Sectors	Small	Medium
Manufacturing	Sales turnover from **RM300,000 to less than RM15 million** OR full-time employees from **5 to less than 75**	Sales turnover from **RM15 million to not exceeding RM50 million** OR full-time employees from **75 to not exceeding 200**
Services & other sectors	Sales turnover from **RM300,000 to less than RM3 million** OR full-time employees from **5 to less than 30**	Sales turnover from **RM3 million to not exceeding RM20 million** OR full-time employees from **30 to not exceeding 75**

Source: (National Entrepreneur and SME Development Council, 2020).

A directory of small and medium enterprises (SMEs) would be acquired from the directories issued by (*SME Corporation Malaysia*, 2023). The data collecting sample consists of several small and medium-sized companies (SMEs) situated throughout Malaysia. Moschella et al. (2019) argue that within academic discourse, there exists a tendency to neglect the significance of small and medium-sized firms (SMEs). The present body of research has mostly concentrated on investigating the effects of blockchain technology on the valuation and performance of publicly listed organizations (PLCs) (Abd Razak et al., 2016) as well as larger corporations. Furthermore, a significant portion of previous scholarly investigations has mostly focused on the Manufacturing Sector (Yaakub & Mustafa, 2015; Abdul Rauf et al., 2019) and the Construction Industries (Yusuwan et al., 2008; Siang & Ali, 2012) hence underscoring the significance of this study. This sampling technique involves the deliberate selection of individuals who possess strategic positions that enable them to provide the required information most efficiently and effectively. The researchers will establish communication with the selected participants through telephone and email, presenting a concise summary of the study that outlines the need for their participation.

Questionnaire distribution is facilitated by the utilization of self-administration methods. The SME firm under consideration must have a minimum operational history of five years. Individuals who do not meet the above criteria will be unable to participate in the data-gathering procedure. Anderson and Gerbing (1988) argue that the main objective of Partial Least Squares Structural Equation Modelling (PLS-SEM) is to do causal-predictive analysis. In this investigation, the investigator utilizes SmartPLS 4 as the selected software application. Furthermore, the conceptual frameworks about company performance are formulated through the adaptation and expansion of pre-existing scholarly works in the field of supply chain management. Reviewing the literature will be done to help the researcher develop the conceptual framework and establish the hypotheses. Considering the importance of the growth and sustainability of small companies for the overall economic welfare of Malaysia and other nations, it is expected that the results of this research

endeavor could potentially improve the competitiveness and operational efficiency of small and medium enterprises (SMEs), thereby benefiting the local, regional, and national economies.

5. Conclusion and Recommendations

Supply chain integration stands as a pivotal mechanism in today's dynamic business environment. Its significance lies in its ability to streamline operations, enhance visibility, and foster collaboration among various stakeholders. For SMEs, particularly, the integration of supply chains holds immense potential to bolster performance and competitiveness (Council, 2000). By seamlessly connecting processes, sharing information, and leveraging technology, SMEs can not only achieve cost efficiencies but also respond adeptly to market fluctuations and customer demands. Furthermore, a well-integrated supply chain empowers SMEs to tap into new markets, forge stronger relationships with suppliers and customers, and ultimately drive sustainable growth. Supply chain integration is not merely a concept, but a strategic imperative for SMEs aspiring to thrive in the ever-evolving global marketplace. Embracing this approach is not only beneficial for individual businesses, but it also contributes significantly to the overall resilience and vibrancy of the broader economic ecosystem.

This conceptual paper will offer valuable insights into the crucial role of Supply Chain Integration in enhancing the performance of Small and Medium Enterprises (SMEs) in the Malaysian environment. This article provides a comprehensive analysis of the distinct obstacles encountered by small and medium-sized enterprises (SMEs) and presents practical suggestions. As a result, it acts as a valuable guide for policymakers, industry participants, and SMEs in navigating these issues. If the recommended methods are successfully implemented, they might potentially bring about a significant transformation in the business environment for small and medium enterprises (SMEs) in Malaysia. This transformation would not only result in improved competitiveness for these enterprises but also ensure their long-term viability in an increasingly linked global context. It is anticipated that the outcomes of this research endeavor may contribute to enhancing the competitiveness and operational effectiveness of small and medium-sized enterprises (SMEs). Furthermore, it is expected that these improvements will have positive implications for the local, regional, and national economies. As a result, organizations may get current and readily accessible comprehensive industry data, enabling them to develop a more lucid comprehension of their position within the industry and make informed projections on prospects.

Contribution: This study will further contribute to the literature on supply chain integration by providing empirical validation of the performance effects of customer integration, a relationship previously receiving mixed results in the literature (Ataseven & Nair, 2017; Aslam *et al.*, 2023). This study will also help to expand the existing body of information in the field of small and medium-sized enterprise (SME) studies. Finally, we also methodologically contribute to the supply chain integration literature by adding the time data dimension in the study, one of the significant weaknesses identified in the previous studies (Qi et al., 2017).

Acknowledgment: The authors would like to thank Universiti Teknologi MARA, Cawangan Melaka for funding this research project under the Skim Geran Dalaman TEJA 2023 (GDT2023/1-9).

References

Abd Razak, N., Ab Rahman, Z. & Borhan, H. (2016). Modeling firm resources – enterprise risk management relationships : An empirical finding using PLS-SEM. *World Journal of Entrepreneurship, Management and Sustainable Development*, 12(1), 35–49. http://dx.doi.org/10.1%5Cn108/WJEMSD-1%5Cn1-2013-005%5Cn

Abdul Rauf, U., Jabar, J. & Mansor, N. (2019). Effects of Enterprise Risk Management (ERM) and Economic Issues on the Performance of Manufacturing Sector-SMEs in Malaysia – A Conceptual Framework. *International Journal of Innovative Technology and Exploring Engineering*, 8(12S2), 593–597. https://doi.org/10.35940/ijitee.l1107.10812s219

Agyei-owusu, B., Asamoah, D., Nuertey, D. & Acquah, I. N. (2022). Examining the relationship between dimensions of supply chain integration, operational performance and fi rm performance : evidence from Ghana. Management Research Review. https://doi.org/10.1108/MRR-06-2021-0464

Alfalla-Luque, R., Medina-Lopez, C. & Dey, P. K. (2013). Supply chain integration framework using a literature review. *Production Planning and Control,* 24(8–9), 800–817. https://doi.org/10.1080/09537287.2012.666870

Ambad, S. N. A., Andrew, J. V. & Awang Amit, D. H. D. (2020). Growth challenges of SMEs: Empirical evidence in Sabah, Malaysia. *ASEAN Entrepreneurship Journal* (AEJ), 6(1), 8–14.

Amoako-gyampah, K., Boakye, K. G., Famiyeh, S. & Adaku, E. (2019). Supplier integration, operational capability and firm performance: an investigation in an emerging economy environment. *Production Planning & Control*, 0(0), 1–21. https://doi.org/10.1080/09537287.2019.1700570

Amoako, T., Huai Sheng, Z., Dogbe, C. S. K. & Pomegbe, W. W. K. (2022). Effect of internal integration on SMEs' performance: the role of external integration and ICT. *International Journal of Productivity and Performance Management,* 71(2), 643–665. https://doi.org/10.1108/IJPPM-03-2020-0120

Aris, N. M. (2007). SMEs : Building Blocks for Economic Growth 1. National Statistics Conference, September 2006, 4–5. http://www.statistics.gov.my/portal/images/stories/files/journal/smes.pdf

Aslam, H., Waseen, M., Muneeb, D., Ali, Z., Roubaud, D. & Grebynevich, O. (2023). Correction to: Customer integration in the supply chain: the role of market orientation and supply chain strategy in the age of digital revolution (Annals of Operations Research, (2023), 10.1007/s10479-023-05191-y). Annals of Operations Research. https://doi.org/10.1007/s10479-023-05332-3

Ataseven, C. & Nair, A. (2017). Assessment of Supply Chain Integration and Performance Relationships: A Meta-Analytic Investigation of the Literature. Intern. Journal of Production Economics. https://doi.org/10.1016/j.ijpe.2017.01.007

Awad, H. a H. & Nassar, M. O. (2010). A Broader View of the Supply Chain Integration Challenges. *International Journal of Innovation, Management and Technology*, 1(1), 51. http://search.proquest.com/docview/1441274421?accountid=14484%5Cnhttp://www.tdnet.com/bgu/resolver/default.asp??genre=article&issn=20100248&volume=1&issue=1&title=International+Journal+of+Innovation,+Management+and+Technology&spage=51&date=2010-04-01&atit

Belvedere, V. & Grando, A. (2017). Sustainable Operations and Supply Chain Management. , (Wiley seri). John Wiley 7 Sons Ltd.

Cespedes, F. V. (1996). Beyond Teamwork: How the Wise Can Synchronize. *Marketing Management*, 5(1), 25–37.

Chen, H., Amoako, T., Quansah, C. E., Danso, S. A. & Jidda, D. J. (2023). Assessment of the impact of management commitment and supply chain integration on SMEs' innovation performance: Moderation role of government support. *Heliyon, 9(5), e15914. https://do*i.org/10.1016/j.heliyon.2023.e15914

Council, N. R. (2000). Surviving Supply Chain Integration: Strategies for Small Manufacturers. In Surviving Supply Chain Integration. The National Academies Press. https://doi.org/10.17226/6369

Cyplik, P. & Adamczak, M. (2015). Dimensions for Developing Supply Chain Integration Scenarios. *Business Logistics in Modern Management*, 0(0), 225–239.

Danese, P. & Romano, P. (2011). Supply chain integration and efficiency performance: A study on the interactions between customer and supplier integration. *Supply Chain Management*, 16(4), 220–230. https://doi.org/10.1108/13598541111139044

Danese, P. & Romano, P. (2013). Article information : *International Journal of Operations & Production Management*, 33(4), 372–393.

Department of Statistics, M. P. (2021). PRESS RELEASE : Revenue for the Services sector in the third quarter 2021 (Issue November, pp. 8–11).

Despoudi, S., Sivarajah, U., Spanaki, K., Charles, V. & Durai, V. K. (2023). Industry 4.0 and circular economy for emerging markets: evidence from small and medium-sized enterprises (SMEs) in the Indian food sector. Annals of Operations Research. https://doi.org/10.1007/s10479-023-05404-4

Dhillon, M. K., Rafi-Ul-Shan, P. M., Amar, H., Sher, F. & Ahmed, S. (2023). Flexible Green Supply Chain Management in Emerging Economies: *A Systematic Literature Review. Global Journal of Flexible Systems Management*, 24(1), 1–28. https://doi.org/10.1007/s40171-022-00321-0

Flynn, B. B., Huo, B. & Zhao, X. (2010). The impact of supply chain integration on performance: A contingency and configuration approach. *Journal of Operations Management,* 28(1), 58–71. https://doi.org/10.1016/j.jom.2009.06.001

Frohlich, M. T. & Westbrook, R. (2001). Arcs of integration : an international study of supply chain strategies. *Journal of Operations Management*, 19, 185–200.

Gimenez, C. & Ventura, E. (2003). Logistics-Production, Logistics-Marketing And External Integration : Their Impact on Performance. *International Journal of Operations & Production Management,* 25(1), 20–38.

Hamilton-Ibama, Lolia, E. O. & Ogonu, C. G. (2021). Customer Integration and Organizational Success of Multinational Firms in Rivers State. *International Journal of Economics and Business Management,* 7(3), 42–55.

Han, J., Lu, H., Trienekens, J. H. & Omta, S. W. F. (Onno. (2013). The impact of supply chain integration on firm performance in the pork processing industry in China. *Chinese Management Studies*, 7(2), 230–252. https://doi.org/10.1108/CMS-Jun-2011-0034

He, Y., Lai, K. K., Sun, H. & Chen, Y. (2014). The impact of supplier integration on customer integration and new product performance : The mediating role of manufacturing flexibility under trust theory. Intern. *Journal of Production Economics,* 147, 260–270. https://doi.org/10.1016/j.ijpe.2013.04.044

Hendijani, R. & Saeidi Saei, R. (2020). Supply chain integration and firm performance: the moderating role of demand uncertainty. *Cogent Business and Management*, 7(1). https://doi.org/10.1080/23311975.2020.1760477

Jabatan Perangkaan Malaysia. (2019). Sustainable Development Goals (Sdg) Indicators Department of Statistics Malaysia. 1–492.

Jagtap, S., Trollman, H., Trollman, F., Garcia-garcia, G., Parra-l, C., Duong, L., Martindale, W., Munekata, P. E. S., Lorenzo, J. M., Hdaifeh, A., Hassoun, A., Salonitis, K. & Afy-Shararah, M. (2022). The Russia-Ukraine Conflict : Its Implications for the Global Food Supply Chains. Foods, February, 1–23.

Jaharuddin, N. S., Mansor, Z. D. & Yaakob, S. (2016). Assessing the Supply Chain Intelligence Practices of Small Medium Enterprises in Malaysia. *Procedia Economics and Finance,* 35(October 2015), 515–521. https://doi.org/10.1016/s2212-5671(16)00064-2

Jayaram, J., Tan, K. & Nachiappan, S. P. (2010). Examining the interrelationships between supply chain integration scope and supply chain management efforts. International Journal of Production Research, December 2014, 37–41. https://doi.org/10.1080/00207540903358329

Kahn, K. B. & Mentzer, J. T. (1996). Logistics and interdepartmental integration. *International Journal of Physical Distribution & Logistics*, 26(8), 6–14.

Kauppi, K., Longoni, A., Caniato, F. & Kuula, M. (2016). Managing country disruption risks and improving operational performance: risk management along integrated supply chains. *International Journal of Production Economics,* 182, 484–495. https://doi.org/10.1016/j.ijpe.2016.10.006

Kim, S. W. (2006). The effect of supply chain integration on the alignment between corporate competitive capability and supply chain operational capability. *International Journal of Operations & Production Management*, 26(10), 1084–1107.

Kim, S. W. (2009). Int. J . Production Economics An investigation on the direct and indirect effect of supply chain integration on firm performance. Intern. *Journal of Production Economics*, 119(2), 328–346. https://doi.org/10.1016/j.ijpe.2009.03.007

Kingman-brundage, J., George, W. R. & Bowen, D. E. (2010). Service logic: achieving service system integration. *International Journal of Service Industry Management,* 6(4), 20–39.

Lee, C. W., Kwon, I. W. G. & Severance, D. (2007). Relationship between supply chain performance and degree of linkage among supplier, internal integration, and customer. *Supply Chain Management: An International Journal*, 12(6), 444–452. https://doi.org/10.1108/13598540710826371

Liu, H., Ke, W., Wei, K. K. & Hua, Z. (2013). Effects of supply chain integration and market orientation on firm performance: Evidence from China. *In International Journal of Operations and Production Management*, 33(3). https://doi.org/10.1108/01443571311300809

Mellat-Parast, M. & Spillan, J. E. (2014). Logistics and supply chain process integration as a source of competitive advantage An empirical analysis. *The International Journal of Logistics Management*, 25(2), 289–314. https://doi.org/10.1108/IJLM-07-2012-0066

Moschella, J., Boulianne, E. & Magnan, M. (2019). The Art, Craft, and Science of Risk Management in Small-and Medium-Sized Family Businesses. In SSRN Electronic Journal. https://doi.org/10.2139/ssrn.3379010

Mostaghel, R., Oghazi, P., Beheshti, H. M. & Hultman, M. (2015). Strategic use of enterprise systems among service firms : Antecedents and consequences ☆. Journal of Business Research. https://doi.org/10.1016/j.jusres.2015.01.049

Munir, M., Shakeel, M., Jajja, S., Chatha, K. A. & Farooq, S. (2020). Supply Chain Risk Management and Operational Performance: The Enabling Role of Supply Chain Integration. International Journal of Production Economics. https://doi.org/10.1016/j.ijpe.2020.107667

National Entrepreneur and SME Development Council. (2020a). Economic performance and outlook 2019/20.

National Entrepreneur and SME Development Council. (2020b). PKS dalam Normal Baharu: Membangun Semula ekonomi. In LAPORAN TINJAUAN PKS 2019/20.

Ngoc, N. M., Viet, D. T., Tien, N. H., Hiep, P. M., Anh, N. T., Anh, L. D. H., Truong, N. T., Anh, N. S. T., Trung, L. Q., Dung, V. T. P. & Thao, L. T. H. (2022). Russia-Ukraine war and risks to global supply chains. *International Journal of Mechanical Engineering*, 7(6), 633–640.

Official Portal of Ministry of Economy. (2021). https://www.ekonomi.gov.my/en/sustainable-development-goals

Ou, C. S., Liu, F. C., Hung, Y. C. & Yen, D. C. (2010). A structural model of supply chain management on firm performance. *International Journal of Operations and Production Management,* 30(5), 526–545. https://doi.org/10.1108/01443571011039614

Pakurár, M., Haddad, H., Nagy, J., Popp, J. & Oláh, J. (2019). The impact of supply chain integration and internal control on financial performance in the Jordanian Banking Sector. *Sustainability (Switzerland),* 11(5). https://doi.org/10.3390/su11051248

Parast, M. M. & Subramanian, N. (2020). An examination of the effect of supply chain disruption risk drivers on organizational performance: evidence from Chinese supply chains. *Supply Chain Management*, 26(4), 548–562. https://doi.org/10.1108/SCM-07-2020-0313

Qi, Y., Huo, B., Wang, Z. & Yeung, H. Y. J. (2017). The impact of operations and supply chain strategies on integration and performance. *International Journal of Production Economics*, 185(July 2015), 162–174. https://doi.org/10.1016/j.ijpe.2016.12.028

Sabet, E., Yazdani, N. & De Leeuw, S. (2017). Supply chain integration strategies in fast-evolving industries. *International Journal of Logistics Management,* 28(1), 29–46. https://doi.org/10.1108/IJLM-01-2015-0013

Schoenherr, T. & Swink, M. (2012). Revisiting the arcs of integration : Cross-validations and extensions. *Journal of Operations Management,* 30(1–2), 99–115. https://doi.org/10.1016/j.jom.2011.09.001

Shayan, N. F., Mohabbati-Kalejahi, N., Alavi, S. & Zahed, M. A. (2022). Sustainable Development Goals (SDGs) as a Framework for Corporate Social Responsibility (CSR). *Sustainability (Switzerland),* 14(3), 1–27. https://doi.org/10.3390/su14031222

Siang, L. C. & Ali, A. S. (2012). Implementation of Risk Management in the Malaysian Construction Industry. *Journal of Surveying, Construction & Property*, 3(1), 1–15. https://doi.org/10.22452/jscp.vol3no1.2

SME Corporation Malaysia. (2020). COVID-19: Impact on Businesses and SMEs — Global, Regional & National Perspectives. *Onkologie*, 32(4), 1–254.

SME Corporation Malaysia. (2022). Profile of MSMEs in 2021. https://www.smecorp.gov.my/index.php/en/policies/2020-02-11-08-01-24/sme-statistics

SME Corporation Malaysia. (2023).

Som, J. O., Cobblah, C. & Anyigba, H. (2019). The Effect of Supply Chain Integration on Supply Chain Performance. *Nobel International Business School*, 5 (293).

Song, G. & Song, S. (2020). Fostering supply chain integration in omnichannel retailing through human resource factors: an empirical study in China's market. *International Journal of Logistics Research and Applications*, 24(1), 1–22. https://doi.org/DOI: 10.1080/13675567.2020.1713305

Stank, T. P., Keller, S. B. & Closs, D. J. (2001). Performance Benefits of Supply Chain Logistical Integration. *Transportation Journal*, 41(2), 32–46.

Stank, T. P., Keller, S. B. & Daugherty, P. J. (2001). Supply chain collaboration and logistical service performance. *Journal of Business Logistics*, 22(1), 29–48.

Taouab, O. & Issor, Z. (2019). Firm Performance: Definition and Measurement Models. *European Scientific Journal ESJ,* 15(1), 93–106. https://doi.org/10.19044/esj.2019.v15n1p93

The Star. (2021). THE STAR.

Tsanos, C. S., Zografos, K. G. & Harrison, A. (2014). Developing a conceptual model for examining the supply chain relationships between behavioral antecedents of collaboration, integration and performance. *The International Journal of Logistics Management,* 25(3), 418–462. https://doi.org/10.1108/IJLM-02-2012-0005

Van Echtelt, F. E. A., Wynstra, F., Van Weele, A. J. & Duysters, G. (2008). Managing Supplier Involvement in New Product Development: A Multiple-Case Study. *The Journal of Product Innovation Management*, 25, 180–201.

Vanpoucke, E., Vereecke, A. & Muylle, S. (2017). Leveraging the impact of supply chain integration through information technology. *International Journal of Operations and Production Management*, 37(4), 510–530. https://doi.org/10.1108/IJOPM-07-2015-0441

Wiengarten, F., Li, H., Singh, P. J. & Fynes, B. (2019). Re-evaluating supply chain integration and firm performance: linking operations strategy to supply chain strategy. *Supply Chain Management*, 24(4), 540–559. https://doi.org/10.1108/SCM-05-2018-0189

Yaakub, S. & Mustafa, H. K. (2015). Supply Chain Risk Management for the SME's. *Academic Journal of Interdisciplinary Studies*, 4(1), 151–158. https://doi.org/10.5901/ajis.2015.v4n1s2p151

Yahya, R. (2021). SDG Indicators 2019 report: Statistical Communication and Engagement.

Yusuwan, N. M., Adnan, H., Omar, A. F. & Jusoff, H. K. (2008). Clients' Perspectives of Risk Management Practice in Malaysian Construction Industry. *Journal of Politics and Law,* 1(3). https://doi.org/10.5539/jpl.v1n3p121

Zhang, M. & Huo, B. (2013). The impact of dependence and trust on supply chain integration. *International Journal of Physical Distribution and Logistics Management*, 43(7), 544–563. https://doi.org/10.1108/IJPDLM-10-2011-0171

Zhao, X., Huo, B., Selen, W. & Yeung, J. H. Y. (2011). The impact of internal integration and relationship commitment on external integration. *Journal of Operations Management*, 29(1–2), 17–32. https://doi.org/10.1016/j.jom.2010.04.004

Zimmermann, F. & Foerstl, K. A. I. (2014). A Meta-Analysis of the Purchasing and Supply Management Practice – Performance Link . *Journal of Supply Chain Management*, 37–54.