Vol. 13 No. 3 ISSN 2220-3796

Editorial

Information Management and Business Review (IMBR) provides a unique platform for scholars around the world to share their knowledge and publish research work in the fields of information management, business, management and related disciplines. The work submitted for publication consideration in IMBR should address empirical and theoretical developments in the subjects related to the scope of the journal in particular and allied theories and practices in general. Scope of IMBR includes: subjects of finance, accounting, auditing, cost & management accounting, financial psychology, financial literacy, marketing, information management, human resource management, knowledge management, innovation, change management, enterprise management, e-commerce and information system. Author(s) should declare that work submitted to the journal is original, not under consideration for publication by another journal and that all listed authors approve its submission to IMBR. It is IMBR policy to welcome submissions for consideration, which are original, and not under consideration for publication by another journal at the same time. Author (s) can submit: Research Paper, Conceptual Paper, Case Studies and Book Review. The current issue of IMBR comprises papers of scholars from Ghana, United Kingdom, Uganda, India, Saudi Arabia and Malaysia. Choice, Purchase Decision and Post-Purchase Dissonance, Global Energy Poverty, Political Relationship Marketing: An Examination of Internal Relationship Management, The Impact of the Ongoing Pandemic on Digital Finance Transactions and Factors Influencing the Adoption of E-Health Management are some of the major practices and concepts examined in these studies. Journal received research submission related to all aspects of major themes and tracks. All the submitted papers were first assessed by the editorial team for relevance and originality of the work and blindly peer-reviewed by the external reviewers depending on the subject matter of the paper. After the rigorous peer-review process, the submitted papers were selected based on originality, significance, and clarity of the purpose. The current issue will therefore be a unique offer, where scholars will be able to appreciate the latest results in their field of expertise, and to acquire additional knowledge in other relevant fields.

Editor In Chief

Ijaz Ur Rehman PhD

Editorial Board

- Lew Tek Yew PhD, Curtin University Sarawak, Malaysia
- Mohammad Kazemi Reza PhD, University of Tehran, Iran
- Chandana Prasad Withana PhD, Charles Sturt University, Sydney, Australia
- KOH Noi Keng PhD, National Institute of Education, Nanyang Technological University, Singapore
- Boubker Sbihi PhD, I-school ESI, Rabat, Morocco
- Ayhan Kapusuzoglu PhD, Yildirim Beyazit University, Turkey
- Sameer Babu M PhD, University of Kerala, India
- Dong Hwa Kim PhD, Hanbat National University, Daejeon, Republic of Korea
- Muhammad Adil Khattak PhD, Universiti Teknologi Malaysia, Malaysia
- Benedict Valentine Arulanandam PhD, University Putra Malaysia, Malaysia
- Yousef Daradkeh PhD, Prince Sattam bin Abdulaziz University, KSA
- Ari Warokka PhD, University Utara Malaysia, Malaysia

TABLE OF CONTENTS

Description	Pages
Title	I
Editorial	II
Editorial Board	III
Table of Contents	IV
Papers	V
Choice, Purchase Decision and Post-Purchase Dissonance: The Social Media Perspective Kobby Mensah, Justice Boateng Dankwah, Gilbert Kofi Mensah, Judith Aku Masope-Crabbe	1
Global Energy Poverty: Nigeria as a Case Study Aladejuyigbe Oluwafemi, Olawumi Dele Awolusi	14
Political Relationship Marketing: An Examination of Internal Relationship Management in Ghanaian Political Parties Ibrahim Sayibu Nnindini, Kobby Mensah	30
The Impact of the Ongoing Pandemic on Digital Finance Transactions: An Empirical analysis Khushbu Agarwal, Nidhi Nalwaya	41
Factors Influencing the Adoption of E-Health Management among Saudi Citizens with Moderating Role of E-Health Literacy Waleed Mansi G Alshammari, Fahad Maiyah M Alshammari, Faiz Mayah M Alshammry	47

PAPERS

Information Management and Business Review (IMBR)
Vol. 13, No. 3, September 2021 (ISSN 2220-3796)

Choice, Purchase Decision and Post-Purchase Dissonance: The Social Media Perspective

Kobby Mensah[1], Justice Boateng Dankwah[2], Gilbert Kofi Mensah[3] & Judith Aku Masope-Crabbe[4]
[1, 3&4]University of Ghana, Legon, Accra, Ghana
[2]University of Energy and Natural Resources, Sunyani, Ghana
kobbymensah@ug.edu.gh, jboatengdankwah@yahoo.com, mensahkofigilbert@gmail.com, judithamasopecrabbe@yahoo.com

Abstract: Social media tools have emerged as an imperative source of information for customers. However, the relationship between information volume on social media and consumer choice quality remains blurred in literature. The study sought to examine the relationship between choice overload on social media and product choice quality, and how choice quality influences post-purchase dissonance. The study employed a positivist research paradigm and an explanatory design to examine the relationship between the various constructs. Using a purposive sampling method, Responses from 249 respondents were quantitatively analyzed. Structural equation modeling (SEM) was utilized. The outcome revealed a direct significant effect of choice overload on poor choice quality and a strong positive association between choice quality and post-purchase dissonance using social media tools. The distinctiveness of the study adds to the existing literature by extending the current understanding of post-purchase dissonance and consumer behaviour in general.

Keywords: *Social media, Choice, Post-Purchase Dissonance, Choice Deficiency, Poor Choice quality.*

1. Introduction

The last decade has witnessed the advancement of multifaceted, diverse, and intensified communications between organizations and customers through social media (SM). Social media since then has aroused a substantial amount of research interest (Li, Larimo, & Leonidou, 2021). Studies in marketing make no exception (Karanatsiou, Misirlis & Vlachopoulou, 2017). A reflection of the fact that consumers in this day and age spend most of their time on several social media platforms to transact high volumes of purchase-related activities in the social media space. The growing nature of the phenomenon calls for more studies across several business levels, sectors and contexts to investigate the adoption, usage, strategies and outcomes of social media to develop theory (Odoom, Anning-Dorson, & Acheampong, 2017). Firms take advantage of social media platforms to reinforce brands, expand their geographic reach to buyers (Gao, Tate, Zhang, Chen, & Liang, 2018) and establish a relationship with consumers (Li, Larimo, & Leonidou, 2021). Hamilton et al. (2016) opine that consumers are also empowered to become creators, collaborators and commentators of messages on social media. The decision-making processes of consumers before product purchase have evolved over time.

It has, therefore, become imperative for both marketers and consumers to strategically employ and leverage social media to attain superior performance and competitive advantage as it continuously evolves from a marketing tool to an information search tool (Lamberton and Stephen, 2016). Twitter, Instagram, Google +, Facebook or Pinterest enables consumers to follow trends and search for product information, share consumption and lifestyle choices with their acquaintances, communicate their affiliated brands, express their brand preferences and stay close to service providers (Xu et al., 2017). Consumers perceive social media as a centre of information collation that informs their product choices (Xu et al., 2017). The success of the social media (SM) platform for the consumer decision-making is dependent on several factors such as the depth and quality of information that offer assistance to user choices and purchase decisions (Liang & Lai, 2002). The advent of social media has permeated the core of the consumer decision-making process as consumers' purchases are widely dependent on the social media content most customers review (Alalwan et al., 2017). This is an indication that information quality on social media remains an integral part of the consumer decision-making process.

Organizations and consumers alike create content (Alalwan et al., 2017). Barger et al. (2016) argue that actions taken by consumers on SM are mostly in relation to product-related information or content posted on firms SM platforms. The content created as a result of these activities may be informative or destructive, influencing consumer choice quality and post-purchase behaviour. The exposure of customers to voluminous

information is termed as "information overload". The quality of choice contingent on such information may be affected (Gensler et al., 2013). Information quality is imperative, as consumers rely on valuable content posted on SM to underpin their purchase decisions (Sinclaire & Vogus, 2011). Evidence (Alalwan et al., 2017) suggests that the quality of information may influence consumers' choice and post-purchase behaviours. The social media literature has produced quite a significant amount of empirical research from consumers' (Dessart et al., 2015: Whiting & Williams, 2013) and firms' perspectives (Odoom et al., 2017; McCann & Barlow, 2015; Ainin et al., 2015). For instance, Zeng and Gerritsen (2014) and Knoll (2016) duly provide systematic reviews on this bourgeoning concept.

Despite its rising popularity, the literature indicates significant gaps. First, gaps exist in the extant literature, with inconclusive findings generally based on contextual dissimilarities (Knoll, 2016). As a result, continued study of the intricacies in social media usage is necessary, especially given their growing applications by consumers for business-related activities and purchasing decision-making. Second, from the consumer behaviour perspective, little evidence exists on the subject, especially from developing or emerging markets (Ainin et al., 2015). Lastly, an analysis of the literature on social media usage by consumers reveals dominance of studies from Europe, Asia and America, with pint-sized representation from Africa (Botha et al., 2011; Zeng and Gerritsen, 2014; Odoom et al., 2020). In this study, we investigate the usage of SM platforms as product information search tools for product decision-making. Consumers are now exposed to an array of brand information on the various social media platforms which could lead to information overload, hence, the current study examines information overload on SM and the nuances of the social media usage by consumers for product information, and how they affect their post-purchase behaviour (Beldad, Jong & Steehouder, 2010).

This study, therefore, attempts to achieve two objectives; (i) Examine the relationship between information overload and quality of choice on SM (ii) and examine the relationship between Choice quality and post-purchase dissonance (PPD) on social media. The current research adds to the literature in at least three modest but pertinent ways. First, it adds to the social media and marketing literature in general. Second, it extends the current understanding of post-purchase dissonance and consumer behaviour in general by responding to the call to provide clarity on the use of SM for product information search and decision purposes. Finally, it provides businesses and managers with an empirical and contemporarily understanding of social media usage for product purchase decision-making. Having established a clear justification for this study, the paper is organized in this order; to begin; we review the relevant literature and formulate hypotheses. The methodology is explained, followed by the data analysis. The findings and implications of the study are also discussed. The study concludes with a discussion on the limitations and directions for future research.

2. Literature Review

The Social Media Concept: Consumer behaviour has been tremendously influenced by social media, from the need recognition stage through to information search and post-purchase behaviours such as satisfaction, dissatisfaction or customer delight statements (Voramontri, & Klieb, 2019, Mangold & Faulds, 2009). The definition of "social media," like many other social science terms, has struggled to reach consensus during the previous decade (Van & Coursaris, 2013). Social media has been defined as "instruments utilized by organizations to engage in socially-based activities such as sharing photos and videos, networking within the social context, and blogging and micro-blogging"(Ala-Mutka et al., 2009). Several types of social media technologies have evolved in recent years. These technologies have been grounded on user and functionality, all playing an important role in current information access (Kietzmann, Hermken, McCarth & Silvestre, 2011). Most firms currently advertise on varied social media pages such as LinkedIn, YouTube, Instagram, WhatsApp, Twitter and Facebook. Organizations have grown to rely on these platforms (Saxena & Khanna, 2013).

These platforms are predominantly used to develop content, share and exchange information (Kaplan & Haenlein, 2010; Alalwan, Rana, Dwivedi & Algharabat, 2017). A series of studies have found that firms employ social media as a medium for promotional activities (Alalwan et al., 2017; Duffett, 2015; Singh & Sonnenburg, 2012), establish a strong sense of recognition, and create product awareness, recall, and top of mind

awareness of consumers. Contrasting evidence suggests that customers may not necessarily evaluate the social media information posted by firms and, as a result, are more likely to use other content on their private social media platforms (Wu, 2016; Yelba, 2010). In a content analysis of social media studies, Smith and Gallicano (2015) revealed that YouTube, Twitter, and Facebook continue to be the most popular social media platforms that many companies use to communicate with customers, generate, and share information and stories. The current study focuses on Instagram, YouTube, Facebook, Twitter as the four most popular social media technologies.

Theoretical Setting and Hypotheses Development

The EKB Model: Engel, Kollet, and Blackwell (1978) created the EKB model of consumer decision-making. The model outlines the decision-making process of consumers and how they make decisions when faced with a list of accessible options. The EKB model posits that consumers go through a series of stages before making a purchase. However, it is not incumbent that every consumer goes through all five phases of the decision-making process. According to the model, some consumers may skip certain stages. For instance, a consumer may recognize a need and will skip the information search and evaluation stage and continue to the purchase stage. This may sometimes be dependent on whether the need recognized is a routine problem-solving or a general need. Detailing the content of the EKB model, the model encompasses five sequential stages. According to Engel et al. (1978), a consumer goes through the five stages before deciding to make a purchase. Need identification is the first stage of the consumer in the buying decision-making process (Kardes, Cline & Cronley, 2011). Kotler et al. (2009) suggest that need identification can either be as a result of intrinsic or extrinsic stimuli. Intrinsic stimulus is triggered by the consumer's psychological make-up whereas the extrinsic stimulus is aroused by the consumer's external environment. Hawkins and Mothersbaugh (2010) argue that the identification of need is generally influenced by factors such as reference groups, social, cultural, and environmental among other factors.

Second, need for relevant information from a variety of sources (external and internal environments). When a need is identified, the customer seeks information from several sources. There are both internal and external information sources employed. Under internal sources, a consumer may recall a product from memory. In recent times, consumers obtain most of their external sources of information from the internet (Agresta & Bough, 2010; Hawkins & Mothersbaugh, 2010). Consumers now appreciate the use of the internet for information search. The internet exposes them to an array of information that tends to influence their purchase decisions. Third, in determining preference, the customers' criterion is used to evaluate alternatives. At this point, customers compare and evaluate several choices based on product attributes and demands. They analyze which option will best meet their requirements (Muzondo, 2016). At the fourth stage, the consumer now decides whether to purchase or decline the purchase. After purchase, the last stage is the post-purchase evaluation. The stage where consumers assess the purchased product to ascertain whether their purchase decisions were sound. The current study found the EKB model suitable to underpin it. The model demonstrates the usefulness of the relationship that exists between consumer information search and consumer purchase decisions.

Hypothesis Development

The Choice Overload Concept: Customers are exposed to a wide range of information on social media. Since the phrase "information overload" was coined in 1970, researchers have sought to understand this problem (Toffler, 1984). Since its popularization, the phrase has regularly been used by academic scholars in their studies (Beniot and Miller, 2017). According to Beniot and Miller (2017), information overload occurs when the volume of input to a system exceeds its processing capacity. The advent of SM and other online networking sites appears to have led to a significant increase in the amount of information a user is exposed to, considerably increasing the user's likelihood of experiencing information overload. The abundance of information available on social media provides an environment ideal for information overload, particularly in the case of microblogging and related activities. It has been suggested that the majority of Twitter users say they receive too many messages, and more than half believe there is a need for a tool to filter out unnecessary tweets to make place for more important and helpful information (Bontcheva et al., 2013). Being bombarded with too much information decreases the quality of their decision making due to consumers' limited cognitive

processing capabilities (Gross, 1964). Excessive information "(information overload)" has been found in empirical studies to have a substantial influence on users' recommendation systems (Borchers et al., 1998), work productivity (Dean & Webb, 2011), and information systems (Borchers & colleagues, 1998; Bawden & Robins, 1998).

Social Media and Content Quality: In current times, social media technologies such as Facebook, Twitter and LinkedIn have substantially transformed the mode of social interactivity by offering novel avenues for engagement and information exchange. Consumers and firms are striving to efficiently incorporate information from diverse social media platforms into their daily business activities, such as product search, recruiting, sales and marketing etc (Sinclaire & Vogus, 2011). Nevertheless, if consumers and firms are to rely on information from social media sites, they must be aware of the quality of such information. Zhou, Zhang, Yang, & Wang (2018) question the quality of user-generated information on SM, arguing that, for information on SM to be dependable, consumers need to be aware of the quality of same. They further suggest an association between the quality of SM content and the quality of the outcome of its uses (Baeza-Yates, 2009).

Information systems (IS) and information quality (IQ) have numerous characteristics within the context of SM. This includes permanence, broad accessibility, modernity, user-friendliness and global reach (Agarwal & Yiliyasi, 2010). According to Hajli (2018), the quality of information (QI) on social media is determined from the subjective (user) and objective (data) perspectives. Ge and Helfert (2007) describe QI as the extent of social media content confirmation and customer intent. In contrast, content quality refers to adhering to pre-defined and well-established norms and regulations to ensure that content on social media is free of flaws that might impede its use. According to Kushwaha (2020), internet use (such as content sharing, online communities, engagement, accessibility, and legitimacy) may impact the quality of a consumer's choice and purchase decision. In an observational study of 144 papers on social media, 89 per cent of research done supported the vital functions of social media to the customer, demonstrating the degree of dependability of SM information by consumers for decision making (Alalwan et al., 2017).

Post-Purchase Dissonance (PPD): Cognitive dissonance has been described in marketing as the anxiety associated with purchase decisions. This happens when customers are in a dilemma choosing between alternatives that have some desirable attributes (Li & Choudhury, 2021). Cognitive dissonance can be categorized into two that is, emotional dissonance and product dissonance. Emotional dissonance is associated with psychological post-purchase discomforts such as regrets, disappointments and sadness. Product dissonance is mostly associated with the purchased product (Zeelenberg & Pieters, 2004; Sweeney, Hausknecht, & Soutar, 2000). The importance of cognitive dissonance theory in management decision-making has garnered more attention in academic literature in recent years (Hinojosa et al., 2017). Post-purchase dissonance (PPD) is a sort of cognitive dissonance that describes a feeling of psychological discomfort caused by conflicts between cognitive elements after purchasing a product (Keng & Liao, 2013). This uneasiness helps customers to alleviate their bad conditions by lowering emotional tension and restoring their psychological balance (Brehm, 1956; Festinger, 1957).

According to Lee (2015), in a fiercely competitive and consumer-centric market, customers increasingly value the ability to return things as a tool to alleviate their PPD. PPD, according to Powers and Jack (2013, 2015), is a key psychological component that explains the influence of drivers of customers' product return behaviour. As a result, attempts to treat PPD are best served by investigating its causes. Based on the evidence from extant literature on the relationship between website information quality and PPD (Kumar & Singh, 2019; Li and Choudhury, 2021), we postulate that information quality on SM should significantly influence PPD with Li & Choudhury (2021) serving as a guide. In their study investigating website information quality and PPD, Li and Choudhury (2021) suggested a relationship between website information quality and PPD. Their study was limited in scope. It was only focused on the relationship between website information quality and cognitive dissonance, ignoring SM which is also believed to be an information source/search tool. Based on the afore arguments, the following hypotheses are formulated;
H1: Choice overload on social media positively influence poor product choice quality.
H2: Poor choice quality on social media positively influence post-purchase dissonance (PPD).

Figure1: Choice Overload and Post-Purchase Dissonance; the Structural Relationship

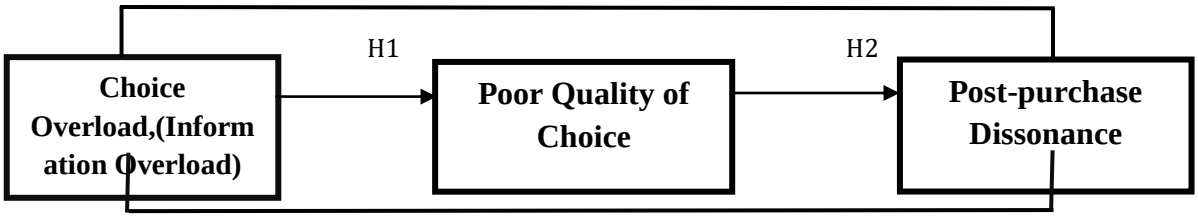

Source: Authors' Construct.

3. Methodology

Sample, Measures, Data Collection, and Analysis: The current study adopts a quantitative methodology. It aimed at examining the statistical relationships between choice overload, poor choice quality, and post-purchase dissonance. This was to determine the impact of choice overload on the quality of choice and decision efficiency (Creswell, 2014). The study was carried out on the campuses of the University of Ghana. The population of the study constituted all members of the university community at the time of the study. Members of the University community are believed to be a subdivision of the population that generally utilizes SM (Dankwah and Mensah, 2021; Hamade, 2013). In a similar study, to determine the impact of political message dissemination on SM on young voters, Dankwah and Mensah (2021) used members of the university community as the population. The study utilized a purposive (non-probability) sampling technique to select respondents (Malhotra & Birks, 2007). A purposive sampling technique was deemed appropriate for the non-availability of a sampling frame for SM users within the population.

A structured questionnaire was used in the investigation (Borden & Abbott, 2002). Scale items were adapted and anchored on a five-point Likert scale ranging from Strongly disagree to Disagree, Neutral to Agree, and Strongly agree to Strongly agree. The questionnaire was developed with two primary sections: the first section requested demographic information from respondents, and the second section concentrated on information on the variables. The sample size for the research was 249 people. The study's sample size was informed by Hair et al. (2017)'s advice that a minimum of 150 participants or more is used for quantitative social research. The researchers found it prudent to first conduct a pilot study. This was to ensure all item indicators were unambiguous and measured the constructs appropriately. Questionnaires were self-administered as respondents were literate enough to read and understand the scale items (Creswell, 2014). SPSS Version 20.0 was utilized. Structural Equation Modeling (SEM) was used to establish relationships between the various constructs.

4. Results and Discussion

Sample Characteristics/Profile of Respondents: As indicated in Table 1 below, two hundred and forty-nine (294) valid responses were attained after the data was screened. The outcome showed that 128 (51.4%) of the respondents were males and 121 (48.6%) were females, which is an indication that the majority of the participants were males. The survey revealed that 193 of the participants were between the ages of 18-23, followed by 24-28 years who represented 11.6% of the sample. This is an indication that most of the respondents were between the ages of 18 and 35, signifying that this cohort is the active users of the various social media platforms (Dankwah & Mensah, 2021). The educational background of the participants was ascertained. 202 of the respondents were first degree holders representing 81.1% with the least respondent being diploma holders. This is an indication that the participants had an adequate educational background that enhanced their ability to understand and answer the questions appropriately.

The outcome presented the various occupational levels. The data again showed that a large portion of the respondents were students (140 representing 56.2%), 68 representing 25.3% were employed, 50 representing 16.1% self-employed, while 5 (2%) were unemployed. The study focused on the four highly patronised social media platforms which are Twitter, Instagram, YouTube and Facebook (Dankwah & Mensah, 2021). These platforms were used by the respondent for diverse purposes. 212 of the respondents used Facebook representing 85.1%; Twitter emerged second representing 10.8% followed by Instagram and

YouTube representing 2.8% and 1.2% respectively. In terms of daily usage, 74.8% agreed that they are daily users of these platforms.

Table 1: Descriptive Statistics of Respondents

Profile of Respondents	Statement	Freq.	%
Gender Specifications	Male	128	51.4
	Female	121	48.6
		249	**100**
Age categories of Respondents	18-23	193	77.5
	24-28	29	11.6
	29-34	23	9.2
	35-39	1	0.4
	40+	3	1.2
		249	**100**
Educational Status	Senior High	6	2.4
	Diploma	3	1.2
	Degree	202	81.1
	Post-Graduate	38	15.3
		249	**100**
Employment Status	Student	140	56.2
	Employed	68	25.3
	Self-employed	41	16.5
	Unemployed	5	2
	Retired	0	0
		249	**100**
Social Media Platform Usage	Yes	249	100
	No	0	0
		249	**100**
Social Media Platform Mostly Used	Facebook	212	85.1
	Twitter	27	10.8
	Instagram	7	2.8
	YouTube	3	1.2
		249	**100**
Frequency of Social Media Usage	Daily	217	74.8
	Once a Week	7	6.2
	More than Once a Week	20	13.9
	Once a Month	1	3.2
	More than Once a Month	6	1.9
How long have you been on social media	Less than one year	146	58.6
	1-5	24	9.6
	6-10	30	12.0
	11-15	10	4.0
	15+	39	15.7

Source: Field Survey.

Confirmatory Factor Analysis (CFA): The main components of the acquired data are presented in table 2 below. Kaiser (1970) suggests that the appropriate Kaiser-Meyer-Olkin (KMO) value be at or above 0.6. The analysis revealed that KMO was 0.827, which is higher than the recommended value. The statistical significance of Bartlett's Test of Sphericity was obtained (approx.: Chi-square= 2007.266, df. 171, sig. 0.000), which confirmed the factorization of the correlation matrix.

Table 2: KMO and Bartlett's Test Results

Kaiser-Meyer-Olkin Measure of Sampling Adequacy		**.827**
Bartlett's Test of Sphericity	Approx. Chi-Square	1244.515
	DF	91
	Sig.	.000

Source: Field Survey.

Reliability and Validity Test: Reliability and validity of the various variables and items were tested to ensure the relevance of the adapted scales. Using a rotated component matrix, the threshold of the factor loadings were set at 0.5. To ensure the appropriateness of all loading data screening and reduction was conducted. This was to delete all poorly loaded items that might have a negative impact on the study's outcome. Table 3 depicts the result of the validity and reliability test. The outcome of the reliability test were all above the acceptable threshold as suggested by Fornell and Larcker (1981) (CR > 0.70, AVE > 0 .50, Cronbach's alphas > 0 .70). Further, the variables factor loadings were between 0.60 to 0.88 depicting the presence of convergent validity. Cronbach (1951) assert that Cronbach Alpha values should be 0.6 or above before a research scale is deemed reliable. Hence, all Cronbach Alpha values presented in the current study attained the recommended threshold. Reliability is the degree to which a measurement scale outcome is consistent if the construct scaling procedures are reapplied (Malhotra & Birks, 2007).

Table 3: Validity and Reliability Test

Principal Component Loadings			**Internal Consistencies**		**Construct Reliability (CR)**	**Average Variance Extracted (AVE)**
Items	**Variables**	**Varimax**	**Variance Explained**	**Cronbach's Alphas**		
Factor 3	ChoOv1	0.659	54.475	0.720	0.734	0.411
	ChoOv2	0.662				
	ChoOv3	0.723				
	ChoOv4	0.717				
	ChoOv5	0.632				
Factor 4	QoC1	0.727	64.892	0.818	0.821	0.537
	QoC2	0.841				
	QoC3	0.723				
	QoC4	0.779				
Factor 5	PPD1	0.749	57.846	0.813	0.819	0.532
	PPD2	0.793				
	PPD3	0.812				
	PPD4	0.761				
	PPD5	0.600				

Source: Field Survey.

Discriminant Validity: The outcome of the analysis showed that there were no validity issues. As presented in Tables 3 and 4. Discriminant validity is the extent to which individual constructs are measured. The study assessed discriminant validity by adopting the Fornell-Larcker standard. This is examined by comparing the square root of the AVEs with the correlations between variables.

Table 4: Discriminant Validity

Factor	CO	QoC	PPD
CO	**0.641**		
QC	0.328	**0.730**	
PPD	0.353	0.198	**0.733**

Source: Field Survey

Final Measurement Model, Model Fit Measures, and Cut-off Criteria: The path analysis was derived after some items were deleted. Figure 2 is the graphical representation of the analysed data. Choice overload represents the independent variable whereas post-purchase dissonance is the dependent variable. Choice quality is the mediating variable between choice overload and post-purchase dissonance.

Figure 2: Final Measurement Model

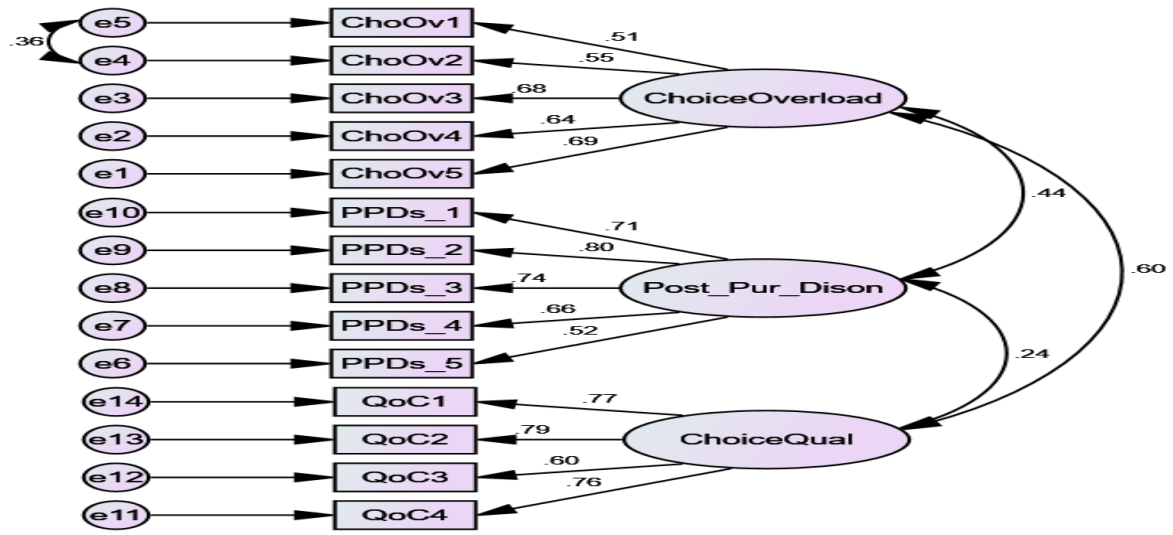

Source: Field Survey

Table 5: Table Model Fit Measures

Measure	Estimate	Threshold
CMIN	145.278	--
DF	73	--
CMIN/DF	1.990	Between 1 and 3
CFI	0.939	>0.95
SRMR	0.060	<0.08
RMSEA	0.063	<0.06
PClose	0.074	>0.05

Source: Field Survey

Table 6: Cut-off Criteria

Measure	Terrible	Acceptable
CMIN/DF	> 5	> 3
CFI	<0.90	<0.95
SRMR	>0.10	>0.08
RMSEA	>0.08	>0.06
PClose	<0.01	<0.05

Source: Hu and Bentler (1999)

Hypotheses testing Using Structural Equation Model: The study formulated two hypotheses (H1 and H2) which analysed the cause-effect between the constructs. H1 analysed the link amid choice overload and quality of choice. Further, the second hypothesis (H2) assessed the quality of choice on post-purchase dissonance. Figure 3 presents the structural equation modelling of the hypothesised relationships.

Figure 3: Structural Equation Model

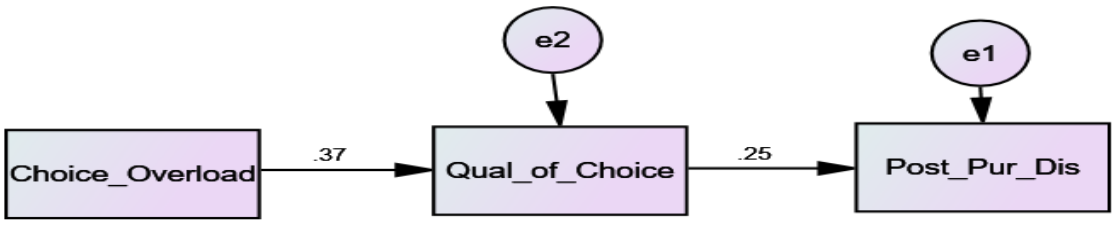

Source: Field Survey/Data Analysis

Summary of Structural Equation Modelling Result: The fit indices of the structural model were examined. The result showed that SRMR=0.034<0.08, CMIN=4.597, RMSEA=0.022<0.06, NFI=.975, GFI=.995, IFI=.997, RFI=.905. The summary of the result has been reported in table 4.7 below.

Table 7: Structural Equation Modeling Outcome

Relationship (Hypothesis)	Construct Structural Relationship	β Estimate	SE	t-Values	p-Values	Outcome
Effect of Choice Overload on Choice Quality						
Hypothesis 1:	Choice_Overload---> Post_Purchase_ Dissonance	0.368	0.06	6.228	***	Supported
The mediating effect of choice quality						
Hypothesis 2: Mediation Effect	Choice_Quality---->Post_Purchase_Disonnance	0.247	0.55	4.008	***	Supported
Indirect Effect		0.091			***	

Source: Field Survey.

Discussion of Findings

The first hypothesis investigated the effect of choice overload on decision quality. The results demonstrated a significant effect of choice overload on decision quality with H1: β = 0.368, t=6.228, p=0***0.05. This suggests that the abundance of information on social media has an impact on the quality of consumer choice. For example, discussions generated from Facebook and concurrently shared information has a significant impact on consumers' ability to make a quality choice of content to rely on (Eskisu et al., 2017). This outcome is

consistent with prior studies that found information overload to have an influence on choice quality (Nguyen et al., 2019; Taylor, Lewin & Strutton, 2011). The second hypothesis examined the relationship between the quality of choice consumers make and post-purchase dissonance. The finding showed a negative but significant relationship between the variables i.e. quality of choice and post-purchase dissonance (H2: t= 4.008, β = 0.247, p=***<0.05), confirming the second hypothesis.

This outcome reveals that the quality of choice consumers make on social media minimizes post-purchase dissonance. Thus, when information accessed on social media are moderate and clear, the consumer is able to make quality choices that negatively affect their post-purchase dissonance. This is to state that, choosing a good product lessens post-purchase dissonance. This Finding again is consistent with earlier studies (Duffett, 2015; Lee & Hong, 2016) which found a positive correlation between quality information and consumers' perception of brands. This study concludes that creative and informative content on social media underpins consumer decision-making. Almeida-Santana and Moreno-Gil (2017) affirm this assertion by reporting that social media advertising content should be worthwhile and relevant to influence consumers' behaviour and decision. It is pertinent that marketing managers improve their interactivity with customers via Facebook and Twitter to enhance their decision-making.

5. Implications and Recommendations

This study, in several ways, adds to the marketing and social media literature. It extends the current understanding of post-purchase dissonance and consumer behaviour in general by responding to the call to provide clarity on social media usage for purchase information search and decision purposes. It again explores to unearth the nuances of the effect of choice overload on consumer choice quality. It sets the agenda for understanding some assumptions underlying the increasing use of social media in Africa for information search and business purposes in general. The market's heterogeneity in Sub-Saharan Africa reflects some of the peculiarities associated with emerging markets. As a result, they provide fertile ground for novel insights in the marketing literature, with some research deviating dramatically from observations of industrialized markets (Odoom & Kosiba, 2020). Using data from a Sub-Saharan African nation, therefore, supplements the literature with (UN) familiar evidence for potential corroborations (Dahlberg et al., 2015). The study, therefore, contributes to extant literature with empirical evidence that progresses our current understanding of the use of SM as a content search tool by consumers for making a purchase decision in emerging/less-developed economies.

The study, also, gives marketing practitioners insight into the use of SM as an information search tool by consumers to make a purchase decision by providing empirical evidence on the subject matter. We, therefore, make the following recommendations; (1) organisations that employ social media platforms to promote their products emphasise developing content to influence consumers that make decisions based on social media information. (2) Marketing and sales managers must also improve their engagement and interactivity with their customers on social media to improve their purchase decision-making processes and successfully manage post-purchase behaviours. (3) Bearing in mind the extent of social media impact in shaping consumers choice, firms can consider celebrity endorsement and social media influencers to improve consumers consideration set, thus strengthening the quality of choice and ensuring effective management of post-purchase behaviours.

Limitations and Future Research Avenues

Whereas this research contributes greatly to SM communication literature, it is not without limitations. However, the limitations do not invalidate the outcome of the study. The constraints of the study, therefore, provide avenues for future research. First, the research utilized a purposive sampling technique. This is a non-probability sampling technique capable of producing a sampling bias. Second, the study did not consider the moderating roles of purchase involvement and demographic characteristics such as age and gender which may be capable of influencing dissonance and social media usage as an information search tool. Future studies may consider these moderating variables. Finally, four social media technologies (Twitter, YouTube, Facebook, and Instagram) were used concurrently in this study. As a result, we recommend that future research explore using specific social media networks. This will reveal the intricacies of how each of them is

used by consumers and provide specificity to the results' applicability. In the future, the social media content of individual organizations may be examined to restrict the findings and give them a more definite meaning to organizations.

Declaration: This study received no support or funding from any entity or organization. We, therefore, declare that there is no issue regarding conflict of interest.

Data Availability Statement: The datasets generated and/or analyzed during the current study are available from the corresponding author on reasonable request.

Consent to Participate: The consent of all respondents was obtained before gathering the data for the study.

Author Contribution: All authors contributed to the success of this article**.**

References

Agarwal, N. & Yiliyasi, Y. (2010, November). Information quality challenges in social media. In ICIQ.

Agresta, S. & Bough, B. B. (2010). Perspectives on social media marketing. Nelson Education.

Ainin, S., Parveen, F., Moghavvemi, S., Jaafar, N. I. & Shuib, N. L. M. (2015). Factors influencing the use of social media by SMEs and its performance outcomes. Industrial Management & Data Systems.

Alalwan, A. A., Rana, N. P., Dwivedi, Y. K. & Algharabat, R. (2017). Social media in marketing: A review and analysis of the existing literature. *Telematics and Informatics*, 34(7), 1177-1190.

Ala-Mutka, K., Broster, D., Cachia, R., Centeno, C., Feijóo, C., Haché, A. & Punie, E. Y. (2009). The Impact of Social Computing on the EU Information Society and Economy (2009). European Commission Joint Research Centre Institute for Prospective Technological Studies: Seville (Spain).

Almeida-Santana, A. & Moreno-Gil, S. (2017). New trends in information search and their influence on destination loyalty: Digital destinations and relationship marketing. *Journal of destination marketing & management*, 6(2), 150-161.

Baeza-Yates, R. (2009, April). User-generated content: how good is it? In Proceedings of the 3rd workshop on Information Credibility on the web (pp. 1-2).

Barger, V., Peltier, J. W. & Schultz, D. E. (2016). Social media and consumer engagement: a review and research agenda. Journal of Research in Interactive Marketing.

Beldad, A., De Jong, M. & Steehouder, M. (2010). How shall I trust the faceless and the intangible? A literature review on the antecedents of online trust. *Computers in human behavior*, 26(5), 857- 869.

Bontcheva, K., Gorrell, G. & Wessels, B. (2013). Social media and information overload: Survey results. arXiv preprint arXiv:1306.0813.

Botha, E., Farshid, M. & Pitt, L. (2011). How sociable? An exploratory study of university brand visibility in social media. *South African Journal of Business Management*, 42(2), 43-51.

Creswell, J. W. (2014). Qualitative, quantitative and mixed methods approach. Sage.

Cronbach, L. J. (1951). Coefficient alpha and the internal structure of tests. *Psychometrika*, 16(3), 297-334.

Dankwah, J. B. & Mensah, K. (2021). Political marketing and social media influence on young voters in Ghana. *SN Social Sciences*, 1(6), 1-19.

Del Hawkins, I. & L Mothersbaugh, D. (2010). Consumer Behaviour Building Marketing Strategy.

Dessart, L., Veloutsou, C. & Morgan-Thomas, A. (2015). Consumer engagement in online brand communities: a social media perspective. Journal of Product & Brand Management.

Duffett, R. G. (2015). Facebook advertising's influence on intention-to-purchase and purchase amongst Millennials. Internet Research.

Engel, J. F., Kollat, D. T. & Blackwell, R. D. (1978). Consumer behavior, 3rd ed. Hinsdale, IL: Dryden

Eşkisu, M., Hoşoğlu, R. & Rasmussen, K. (2017). An investigation of the relationship between Facebook usage, Big Five, self-esteem and narcissism. *Computers in Human Behavior*, *69*, 294-301.

Fornell, C. & Larcker, D. F. (1981). Structural equation models with unobservable variables and measurement error: Algebra and statistics.

Gao, H., Tate, M., Zhang, H., Chen, S. & Liang, B. (2018). Social media ties strategy in international branding: An application of resource-based theory. *Journal of International Marketing*, 26(3), 45-69.

Ge, M. & Helfert, M. (2007). A review of information quality research—develop a research agenda. In Paper presented at the International Conference on Information Quality 2007.

Gensler, S., Völckner, F., Liu-Thompkins, Y. & Wiertz, C. (2013). Managing brands in the social media environment. *Journal of interactive marketing*, 27(4), 242-256.

Hajli, N. (2018). Ethical environment in the online communities by information credibility: a social media perspective. *Journal of Business Ethics,* 149(4), 799-810.

Hamade, S. N. (2013). Perception and use of social networking sites among university students. Library Review.

Hamilton, M., Kaltcheva, V. D. & Rohm, A. J. (2016). Social media and value creation: the role of interaction satisfaction and interaction immersion. *Journal of Interactive Marketing*, 36, 121-133.

Hinojosa, A. S., Gardner, W. L., Walker, H. J., Cogliser, C. & Gullifor, D. (2017). A review of cognitive dissonance theory in management research: Opportunities for further development. *Journal of Management,* 43(1), 170-199.

Kaiser, H. F. (1970). A second generation little jiffy. *Psychometrika*, 35(4), 401-415.

Kaplan, A. M. & Haenlein, M. (2010). Users of the world, unite! The challenges and opportunities of Social Media. *Business Horizons*, 53(1), 59-68.

Karanatsiou, D., Misirlis, N. & Vlachopoulou, M. (2017). Bibliometrics and altmetrics literature review: Performance indicators and comparison analysis. Performance Measurement and Metrics.

Kardes, F. R., Cline, T. W. & Cronley, M. L. (2011). Consumer behaviour: Science and practice.

Kietzmann, J. H., Hermkens, K., McCarthy, I. P. & Silvestre, B. S. (2011). Social media? Get serious! Understanding the functional building blocks of social media. *Business Horizons*, 54(3), 241-251.

Knoll, J. (2016). Advertising in social media: a review of empirical evidence. *International Journal of Advertising*, 35(2), 266-300.

Kumar, v. & Singh, n. (2019). Post-purchase experience of consumers in life insurance policies: an empirical study. *Skyline business journal*, 14(2).

Kushwaha, B. P. (2020). Implementing Sustainable Marketing through Integration of Employees, Customers and Technology. *PalArch's Journal of Archaeology of Egypt/Egyptology*, 17(6), 2089-2099.

Lamberton, C. & Stephen, A. T. (2016). A thematic exploration of digital, social media, and mobile marketing: Research evolution from 2000 to 2015 and an agenda for future inquiry. *Journal of Marketing*, 80(6), 146-172.

Lee, J. & Hong, I. B. (2016). Predicting positive user responses to social media advertising: The roles of emotional appeal, informativeness, and creativity. *International Journal of Information Management*, 36(3), 360-373.

Li, F., Larimo, J. & Leonidou, L. C. (2021). Social media marketing strategy: definition, conceptualization, taxonomy, validation, and future agenda. *Journal of the Academy of Marketing Science*, 49(1), 51-70.

Li, M. & Choudhury, A. H. (2021). Using website information to reduce post-purchase dissonance: A mediated moderating role of perceived risk. *Psychology & Marketing*, 38(1), 5669.

Liang, T. P. & Lai, H. J. (2002). Effect of store design on consumer purchases: an empirical study of online bookstores. *Information & management,* 39(6), 431-444.

Liao, T. H. & Keng, C. J. (2013). Online shopping delivery delay: Finding a psychological recovery strategy by online consumer experiences. *Computers in Human Behaviour*, 29(4), 1849-1861.

Malhotra, N. K. & Birks, D. (2007). Marketing Research, an Applied Approach, European Edition.

Mangold, W. G. & Faulds, D. J. (2009). Social media: The new hybrid element of the promotion mix. *Business Horizons,* 52(4), 357-365.

McCann, M. & Barlow, A. (2015). Use and measurement of social media for SMEs. Journal of small business and enterprise development.

Muzondo, N. (2016). Modelling consumer behaviour conceptually through the seven Ps of marketing: A revised theoretical generic consumer stimulus-response model.

NGUYEN, V. & BANG, J. (2019). E-tailing & brand communication in facebook: Comparing Germans and Koreans. *The Journal of Distribution Science*, 17(8), 99-106.

Odoom, R., Anning-Dorson, T. & Acheampong, G. (2017). Antecedents of social media usage and performance benefits in small-and-medium-sized enterprises (SMEs). *Journal of Enterprise Information Management*.

Odoom, R., Anning-Dorson, T. & Acheampong, G. (2017). Antecedents of social media usage and performance benefits in small-and-medium-sized enterprises (SMEs). *Journal of Enterprise Information Management*.

Osei, B. A. & Abenyin, A. N. (2016). Applying the Engell–Kollat–Blackwell model in understanding international tourists' use of social media for travel decisions to Ghana. *Information Technology & Tourism,* 16(3), 265-284.

Powers, T. L. & Jack, E. P. (2015). Understanding the causes of retail product returns. *International Journal of Retail & Distribution Management*.

Saxena, A. & Khanna, U. (2013). Advertising on social network sites: A structural equation modelling approach. *Vision,* 17(1), 17-25.

Sinclaire, J. K. & Vogus, C. E. (2011). Adoption of social networking sites: an exploratory adaptive structuration perspective for global organizations. *Information Technology and Management*, 12(4), 293-314.

Singh, S. & Sonnenburg, S. (2012). Brand performances in social media. *Journal of interactive marketing*, 26(4), 189-197.

Sweeney, J. C., Hausknecht, D. & Soutar, G. N. (2000). Cognitive dissonance after purchase: A multidimensional scale. *Psychology & Marketing*, 17(5), 369-385.

Taylor, D. G., Lewin, J. E. & Strutton, D. (2011). Friends, fans, and followers: do ads work on social networks: how gender and age shape receptivity. *Journal of advertising research*, 51(1), 258-275.

Toffler, A. (1984). Previews and premises. Black Rose Books Limited.

Van Osch, W. & Coursaris, C. K. (2013, January). Organizational social media: A comprehensive framework and research agenda. In 2013 46th Hawaii International Conference on System Sciences (pp. 700-707). IEEE**.**

Voramontri, D. & Klieb, L. (2019). Impact of social media on consumer behaviour. *International Journal of Information and Decision Sciences*, 11(3), 209-233.

Whiting, A. & Williams, D. (2013). Why people use social media: a uses and gratifications approach. Qualitative market research: an international journal.

Xu, A., Liu, Z., Guo, Y., Sinha, V. & Akkiraju, R. (2017, May). A new Chabot for customer service on social media. In Proceedings of the 2017 CHI conference on human factors in computing systems, 3506-3510.

Zeelenberg, M. & Pieters, R. (2004). Beyond valence in customer dissatisfaction: A review and new findings on behavioural responses to regret and disappointment in failed services. *Journal of Business Research,* 57(4), 445-455.

Zeng, B. & Gerritsen, R. (2014). What do we know about social media in tourism? A review. *Tourism management perspectives*, 10, 27-36.

Zhou, L., Zhang, D., Yang, C. C. & Wang, Y. (2018). Harnessing social media for health information management. *Electronic commerce research and applications*, 27, 139-151.

Information Management and Business Review (IMBR)
Vol. 13, No. 3, September 2021 (ISSN 2220-3796)

Global Energy Poverty: Nigeria as a Case Study

Aladejuyigbe Oluwafemi[1] & Olawumi Dele Awolusi[2]
[1]Department of Business Administration, the Business School, University of Roehampton, London, UK
[2]Department of Accounting and Finance, College of Economics and Management, Kampala International University, Kampala, Uganda
oluwafemi.aladejuyigbe@roehampton-online.ac.uk, awolusi.olawumi@kiu.ac.ug

Abstract: The deplorable condition of energy supply and distribution, generally called vitality neediness has been distinguished as one noteworthy failure militating against the satisfaction of Nigeria's objective of achieving financial improvement. The objectives of this study are to identify the challenges that limit the development and accentuate the stagnancy and near decline in Nigeria's energy sector. AmartyaSen's Capability approach was the theory that provided the framework for the study. The comfort examining the system, the purposive inspecting procedure and the arbitrary determination method were utilized. The purposive examining strategy was utilized to choose five (5) respondents from the best administration staff of the power segment for the inside and out meetings, while the random sampling technique was utilized in selecting discussants for the Focus Group Discussions. Findings revealed that that the pervading challenges that impede the development of the electricity sector in the country are the insufficient financial capacity to purchase huge power generating sets or maintain the existing ones, the commercial unavailability of the electricity sector that renders it unattractive to prospective investors, consumers' unwillingness to pay for electricity units at cost-reflective prices. In conclusion, the findings of this research indicate that energy poverty possesses an adverse effect on both the individual and economic well-being of the nation. The study recommends that more funding, both from private individuals and government is required to enhance electricity generation, transmission and distribution in the country. It also recommends a revitalization of the country's electricity sector, to make it more commercially viable and attractive to an investor.

Keywords: *Energy poverty, Capability Theory, purposive sampling technique, electricity, power, energy, in-depth interviews.*

1. Introduction

Energy or fuel poverty is one of the many problems bedeviling many countries worldwide. This is despite the speedy technological growth that the contemporary era is witnessing (Lefkothea and Dimitris, 2018: 1). Humans' lives and their quality appear not to be at par with the technological growth that is currently being witnessed as many families encounter problems with their electricity requirements, caused by their inability to fund their power fees or limitations on the accessibility to electricity or power (Olayisade & Awolusi, 2021; Awolusi, 2021). This situation occurs particularly because of insufficient finances, exorbitant prices of electricity or power insufficiency (Legendre and Ricci, 2015; IEA, 2011). Numerous schools of thought believe that energy powers and sustain the universe. Undoubtedly, considering the role that energy plays with regards to the infrastructural and socio-economic growth of any nation, one can easily submit that energy is indispensable to human survival. However, the energy poverty level affecting the globe seems to be on an incremental path with population explosion, especially in a country like Nigeria, which happens to be the study subject of this research work.

In a study conducted by the Nigerian Bureau of Statistics in collaboration with Nigeria's apex bank, CBN and Nigerian Communications Commission, it was revealed that citizens encounter the worst cases of electricity deprivation worldwide. This is partly because, despite the increment of the country's population size, very minimal developmental strides have been recorded in the country's energy sector. According to (Eleri, Ogwu, and Onuvae, 2012), about 15.3 million families are deprived of an electricity connection; while people with access witness unstable power. It is worthy to note that some essential daily activities are hinged on the availability of energy, for example, cooking food, maintaining an average temperature accommodation, running sewages, utilizing household types of equipment, functioning of basic health and medicinal services, correspondence and transport (Oladejo & Awolusi, 2017). Energy is also required to run productive activities, which include businesses, agriculture, production and industries. Hence, it can be inferred that a lack or deficiency of power increases poverty, economic downturn and inflation.

At this juncture, it must be clarified that energy or power as used in this research does not only mean electricity because there exist numerous power sources, some of which are; charcoal, gas, solar and petrol all of which are available in abundant quantities in some countries, Nigeria inclusively. However, despite this abundance, Nigeria remains under-developed. Scholars such as Jean and Marc, (2007) calculated that the increasing requirement of power keeps raising attention from pundits that opine that considering power consumption currently, exploitable fuel will last only about four (4) decades for oil, six (6) decades for gas, while charcoal will last for a little beyond two centuries. Despite Nigeria's role as Africa's frontline producer of petroleum, her capacity to produce and supply energy is still grossly insufficient for her population (Awolusi and Atiku, 2019). International Energy Agency, (2007) states that "a people's accessibility to power leads to an improvement in lives' quality and is a requirement for the growth of the economy." The country thus encounters electricity poverty because there is no sustained growth in power development. In 2016, a World Bank document revealed that Nigerians experience an averagely of about 33 power cuts and electricity rationing monthly because of insufficient power supply and obsolete technology.

The major challenges that Nigerians undergo are governments and their agencies' inability to provide, uninterrupted, reliable and stable electricity and also corruption practices in government and its agencies. In a document released in 2013 by Transparency International, Nigeria ranked 144 out of 177 most corrupt nations worldwide. It is noteworthy to state that in estimating power or energy poverty there exists a continuum of numerous debates in the academic communities. These debates are about the different procedures of estimating poverty in power and energy, (DECC, 2015). In addition, the methodologies proposed for the identification of poverty of power as well as its affected persons vary. While there exist subjective systems predicated on individual beliefs about electricity and its usage, there also exist other systems that are estimated with objective variables. These variegated systems have witnessed theoretical scrutiny and criticisms say (Fahmy, 2011; Heindl, 2015; Schuessler, 2014). However, there exists a lacuna in the empirical comparative analysis that takes into consideration the measurement of a realistic case study, examining the consequences of the limitations that exist in these theories. Against this backdrop of the factors cited above, one can fathom that the challenges of energy poverty, alongside.

Its connected complex nature can be solved utilizing concerted efforts and policies, which require adequate examination and grasp of energy or power poverty (Nussabaumer et al., 2012). It is on this premise that this study seeks to employ the case study method to investigate the effects of Nigeria's energy poverty on the socio-economic life of individuals as well as the economy as a whole, about the observed retarded developmental growth of the country. The deficient state of energy supply and distribution, otherwise called energy poverty has been identified as one major debacle militating against the fulfillment of Nigeria's goal to become a part of the foremost countries in the year 2020. This is connected to the adverse effects that energy poverty has had on family units' financial sufficiency and other socio-economic pointers such as the rate of joblessness (Road map for Energy Sector Reform in Nigeria, 2010). Krizanic (2007) stated that the arrangement of energy is now tilted towards becoming as important as feeding. This served as one of the reasons that informed the decision of energy poverty for this investigation. Furthermore, the significance of power or electricity not just for individual sustenance, but also for the social and economic growth and development of any country cannot be discarded.

Mbisiogu (2013) revealed that due to power instability, almost 834 manufacturing companies out of about 2,400 companies moved out of the country to surrounding nations such as Togo, Ghana and Benin Republic in the last five years. Thus, power can be deemed as the main factor that drives both individual growth and the national growth of an economy. In the last decade, the government of Nigeria made huge financial investments into the power sector with billions of US dollars, aimed towards improving the generation, transmission and distribution of electricity (Awolusi, Pelser, and Adelekan, 2016). In addition, the government also made similar investments into flammable gas supply frameworks; however, none of these interventions seems to be yielding the desired result of improved availability of energy to the nation's citizens. The significance of electricity to the eight Sustainable Development Goals, erstwhile called the Millennium Development Goals is evident because the goals will not be fulfilled until a major alteration is achieved to boost the administration and availability of power (UNDP, 2010). Therefore, it is against this backdrop that this research studies the energy poverty situation of Nigeria.

In a bid to qualitatively scrutinize the current status quo in the country's energy sector while simultaneously identifying the challenges necessitating the current state of affairs. This research also highlights the adverse effects of energy poverty, not just at the level of an individual, but also at the level of its socio-economic impact on the nation. In addition, this study will also examine measures that can be employed to boost electricity generation and transmission in the country. Consequently, the broad objective of this study is to analyze Nigeria's electricity sector, while concomitantly highlighting the nexus between power or energy and its effects on both human advancement and a larger scale, financial and socio-economic development. Other specific objectives include the following:

- Identifying the challenges that impede the development and accentuate the stagnancy and near decline in Nigeria's energy sector.
- Enumerating various strategies and measures that can be employed to solve Nigeria's energy challenges.
- Highlighting the effects of energy poverty on the economic growth of the country.

To analyze the above objectives, the following research questions were contrived:

- What are the challenges that militate against the growth of power generation in the electricity sector of the country?
- What strategies or models can be used to improve power generation and distribution in Nigeria?
- What are the effects of energy poverty on the economic growth of the country?

Despite the initiative of past governments to improve the energy sectors, especially increasing electricity power generation, the country on the contrary seems to be recording an even lesser electricity supply. After studying countries that have undergone energy crises in the past and the strategies employed in tackling the energy challenge, this research work will serve as resourceful material in proffering practical steps to solving the energy poverty challenge in Nigeria. This research work also exposes the challenges that impede the development of the energy sector despite the enormous resources that are constantly injected into the sector of the economy. Through this research work's suggestions and recommendations, other researchers and scholars can get insight into new vistas of energy researches. Government agencies can also employ the suggestions and recommendations of this research work to improve the energy/power sector of the nation. However, this present study is on 'Global Energy Poverty, with a specific spotlight on the Nigerian energy situation. It is pertinent to indicate that of the entire energy source available, particular emphasis will be laid on electricity no other forms of energy sources. This study will try to portray the correlation that exists between energy and the economic growth and development of a nation. The study also understudied the complete structure of the Nigerian electricity sector, from the generation stations, the transmission companies, the electricity distributors, to the users of electricity.

2. Review of Related Literature

Conceptual Review: Nigeria suffers from a high level of electricity poverty, especially acute inaccessibility and insufficiency of electricity; this status quo exists despite the gigantic availability of minerals and other sources of power. Scholars such as Sanusi and Owoyele (2016: 1) reveal that inordinate attention is cast on electricity generated from water, while electricity remains insufficient and other sources of power draw minimal attention and remain untapped. Just as it is with many other fields, the idea of energy insufficiency or poverty lacks a universally acceptable description. Different authors and scholars have used the term in various contexts to suit their discussion and especially their locale or country of review. However, among these very many definitions, and interpretations of the term 'energy poverty, some certain features and descriptions pervade many of the definitions. According to (Sher et al., 2014), the World Economic Forum sees the term as 'insufficient accessibility to power or electricity sources.'

That is, living in conditions devoid of access to constantly available and affordable electricity. In the words of Bazilian et al. (2014), energy poverty was conventionally employed in the description of challenges of insufficient access to electricity, particularly in third-world countries. The challenges always brought to the fore during the consideration of the term include economic, infrastructural, health, educational and social problems. Sadath and Acharya (2017) posit the existing tradition in the definition of energy poverty is to

encapsulate the unavailability of energy in advanced nations with ideas of poverty of fuel, while in third-world nations, with ideas of poverty of energy. Therefore, insufficient fuel for heating purposes in advanced nations and insufficiency of electricity in third-world nations symbolizes electricity poverty, which possesses adverse effects for the economy of a country. Another scholar, Day et al. (2016), suggests that insufficient electricity necessitates incapacitation because of the limitation to pocket-friendly and available electricity as well as other services that come with the availability of electricity.

Energy Poverty in Nigeria: Over the years, the trends of pricing of fuel and other forms of energy have led to the increment of electricity and other forms of power poverty in the nation. As proven by the constant increment in the pump price of petroleum, individuals are forced to pay more money to pay for energy, thereby using up a large percentage of their emolument to buy the required energy needed for ease of their lives. With these increments in prices of power caused by insufficient energy supply, it is a contributory variable for the nation's economic backwardness, even with the contrasting availability of energy resources. In the words of the most indigent families in the country make about 1 to 2 US Dollars per day but spend an average of 0.40 US dollars daily for power requirements. Families and corporate entities expend over 10% of their finance to fulfill their electricity needs, while the consequence of electricity poverty.

As encountered in the nation is increments of tariffs charged by telecommunications firms, transportation prices and increments in the prices of energy to power blocks of buildings, all of which will skyrocket because of the influence of the high price of powering activities of economic importance (Odoko et al., 2003). Odoko et al. (2003) therefore posited that surges in prices and instability of power or electricity are the foundations for energy poverty. They also added that other causes of energy poverty in the country include; Nigerian ports' ability to contain larger ships, pipeline vandalism, adequate, depots, constant strike actions by tankers drivers, corruption, militancy and kidnappings. It is therefore imperative to discuss the reasons for the current under-exploitation and usage of sustainable power sources and the methodologies to help openness to power in the nation. It is also important to examine the policy lapses that impede the shift from hydroelectricity to renewable electricity. They include the following:

Lack of Appropriate Legal Framework: Most of the country's energy policies lack legal enforcement, therefore limiting the sanctions for persons that flout the laws. In addition, successive tenures of government come with recurring alteration of programs and policies as well as tardiness in challenging certain institutions notorious for breaking energy laws. A particular instance is the reforms of the Electric Power Sector Reform Act of 2005, which is devoid of the ability to bring about the availability of electricity to uncountable indigent Nigerian citizens that lack connection to the national electricity source.

Adequate Financing: Nigeria's electricity system needs urgent capital investment to be able to perform optimally. The International Centre for Energy Environment and Development in a report published in 2011 estimated that about 200billion US$ is the requirement to achieve optimal electricity generation, transport and distribution. In addition to the amount mentioned above, the private sector arm of the economy also needs to pour their investment to augment the required financial resources required to achieve accessibility to electricity.

Research and Development: The major players in the nation's electricity sector are not up to date in their knowledge of renewable electricity sources, thus continuing to make policies and decisions based on outdated mechanisms of electricity generation utilizing the hydro-turbine system. Therefore, for the energy sector to witness a considerable leap in production, distribution and transmission, there has to be adequate funding for research and development, both of which are very necessary for discoveries and developmental growth to be attained in Nigeria's energy distribution.

Institutional Arrangements: Inefficient coordination that exists in the agencies and organizations that coordinate the nation's electricity sector leads to more challenges and complications in the process of the implementation of electricity objectives. In addition, contempt, rivalries and unclear description of functions and duties that exist among the arms of the electricity sector gives prospective investors a negative impression about the nation's electricity sector.

Establishing Green Jobs in Nigeria: To destroy the ill-luck of electricity poverty, which portends high levels of unemployment and other social vices, in the nation, there has to be the provision of financial grants and aids that will boost support and research into renewable electricity generation in the country. The International Centre for Energy, Environment and Development in a 2010 report revealed that a system that possesses low carbon can create about 600,000 new employments in the electricity and the gas energy sectors. In addition, efficient gas utilization, coupled with complete stoppage of gas flaring has the capacity of improving production industrially, thereby boosting income made from exportation. This study's scope of energy is restricted to family requirements, but also admits that numerous sources of power or energy are required to attain economic growth. Popular electricity-enabled services as required by families include; cooking purposes, home heating or cooling, for lighting, studying, and operating gadgets such as air conditioners, fans, et cetera.

Theoretical and Empirical Reviews: The core significance of electricity in enabling family and social wellbeing proposes that the idea of intensity or vitality destitution has the right to be inspected in an increasingly comprehensive methodology devoid of reduction to mere variables such as the price of power or energy or the volume of the energy utilized. Therefore, this approach as propounded by AmartyaSen is especially important in grasping the causes of energy poverty, or in this context, electricity poverty and the strategies to solve the challenges. This approach sheds a spotlight on the results and wellbeing instead of the process of attaining such wellbeing. Furthermore, accessibility to green and healthy electricity is connected to AmartyaSen's approach of the capability to develop, particularly through economic facilities — which is part of the five important freedoms mentioned by AmartyaSen, as aiding in the advancement of the overall individual capability (Sen, 2014). She further claims that an individual's ability to reach power sources, such as electricity is a necessary tool that families require; hence its unavailability suggests incapacitation. Therefore, conventional approaches in the conceptualization and measurement of accessibility to pocket-friendly sources of energy via income or expenditure variables are grossly restrictive and can result in the wrong information. Therefore, when a person's freedom of choice is taken away, such a person is denied a capability and can be deemed an example of underdevelopment.

Thus, as this study examines power, energy or electricity poverty in this approach, it becomes conspicuous that insufficient accessibility or the unaffordability of electricity diminishes life's quality for numerous Nigerian citizens. In summary, for this study, energy poverty shall be examined via AmartyaSen's Capability approach because of the poverty of electricity. For example, a report by the World Health Organization, released in 2016 revealed that about 4.3 million persons are lost every year as a result of sicknesses connected to air pollution in families that utilize solid fuels, such as coal and wood while making meals. As a result of the harm necessitated by energy poverty, Sen (2014) made an observation that considerations should be made in a bid to ease the production of energy that is healthier for both the environment and humans, while also ensuring efficiency of use. From the foregoing, it can be gleaned that energy poverty can be comprehensively examined employing the Capability approach as propounded by Amartya Sen. Therefore, the challenge of energy poverty in Nigeria, in this study, shall be examined with this comprehensive approach, to reveal the depth of social and economic harm that energy poverty constitutes on the lives and the economy of Nigeria and Nigerians. Energy poverty and its impact on the economic and social welfare of nations has been an interesting area of interest among researchers and scholars especially in advanced nations in Europe.

There have been concerted efforts directed at understanding the consequences or effects of energy poverty on economic cum social wellbeing and development of societies. In this section of this research work, we shall attempt to briefly review several empirical studies about energy poverty and its effects on societies and nations. In a study conducted by (Pachauri et al., 2012), there was proof of reduction of energy poverty amid energy-deprived Indian citizens. The study discovered that an increment in the accessibility to energy led to appreciable socio-economic advantages for energy-deprived persons. Furthermore, (Pereira et al., 2011) announced synonymous implications in Brazil via sustained action of the authorities in the expansion of dependable electricity. Another group of scholars (Andadari, Mulder and Reitveld, 2014) revealed that from the Asian country of Indonesia, via programs aimed at spreading the distribution of affordable LPG to families, there were recorded improvements in living standards and social wellbeing. Another detailed research work by (Wang, Wang and Wei, 2015) discovered proof of a decrement in China's power poverty as a result of a boost in power servicing availability and pocket-friendliness as well as power effectiveness. In

another related study by Tang and Liao, (2014) they asseverated that, despite the popularity of massive energy empowerment, in terms of mass connection to electricity and decrement of energy poverty.
Rural China's reliance on harmful solid fuels remained on the high side, thus indicating peculiarities of the countryside. Research work on the significance of renewable energy in the reduction of worldwide power insufficiency was conducted by the duo of González and Eguino (2015). In addition, in another research that highlighted the greater social and economic effects of energy poverty as conducted by Szakonyi and Urpelainen (2015), they mentioned the presence of widespread power insufficiency among traders in Patna, India. They suggested that attacking the power insufficiency with constant lighting could boost their sales and increase their living standards. In a similar vein, (Sovacool, 2013) aired the opinion that specially designed general and individual actions were required in diminishing energy insufficiency in the country of Myanmar, which holds the record of a paltry 13% of families connected to power. Therefore, the empirical studies discussed above are a few among the several other studies, suggesting that efforts have been made by scholars to investigate the effects and consequences of energy poverty on the economic cum social well-being of nations. A summary of all the reviewed work shows that energy and its accessibility have huge significance in the growth and development of nations and societies.

It also contributes immensely to the quality of life of individuals and a large extent, especially for clean renewable energy, contributes to a healthy environmental configuration. It is therefore against all of these forgoing that this study seeks to contribute to the existing body of work by studying energy poverty, with Nigeria as its case study. Research into the area of energy poverty is greatly limited by the scarcity of information in terms of the fact that both quantitative and qualitative data are almost not available or patchy at best. In addition, the design and implementation of policies and programs to diminish power insufficiency and make it a thing of the past in the nearest future requires input that is realistic and surpasses abstraction or conjecture. Thus, the challenge of energy poverty has long ago been in existence. However, without concerted actions, the energy situation might worsen, thereby increasing the causalities who are adversely affected by their inaccessibility to electricity in some parts of the world, particularly, sub-Saharan Africa, (IEA, UNDP and UNIDO, 2010). Furthermore, while numerous pieces of literature exist on the topic of energy poverty globally significant analytical gaps remain. Therefore this research aims at contributing to the body of knowledge connected to the area of energy poverty and measures to create sustainable energy development.

3. Methodology

The main aim of this study was to examine Nigeria's energy sector, while simultaneously portraying the connection between electricity and its effects on both human advancement and the financial and socio-economic development of the nation. In other words, this study sought to understand the effects of energy poverty on both the individual and societal development of the nation. Therefore, because this is research that deals with human reality and how some certain unquantifiable variables affect their daily lives, the qualitative method of research was adopted. The purpose of employing this research method was to elicit information from respondents, especially from members of staff of the country's electricity sector. This study also made use of in-depth interviews and Focus Group Discussions as part of the research design. The methods employed were considered suitable to answer this study's research questions. The population for this study comprised the entire machinery of the energy sector of the country (Nigeria), with specific emphasis on the staff of the electricity sector of the country. This includes five (5) managerial staff in the power generation, transmission and distribution companies.

As well as a cross-section of Nigerian citizens who will shed light on the power generation in the country. For ease of conducting this research, only four (4) states among the 36 states and the Federal Capital Territory of the country were visited in the course of conducting this research work. The states include the Southwestern states of Oyo, Ogun, Lagos and Osun. A total of (50) randomly selected Nigerians, that is, (10) from each of the states visited and (10) from the FCT were also interviewed to get their thoughts and opinion about the energy situation in the country, its relationship with human and national development and probable strategies of improving the nation's energy situation. In the course of conducting this research, the convenience sampling technique, the purposive sampling technique and the random selection technique were employed (Odunlami, Awosusi, and Awolusi, 2017). The purposive sampling technique was used to select five (5) respondents from top management staff of the electricity sector for the in-depth interviews, while the random sampling

technique was utilized in selecting discussants for Focus Group Discussions. The purpose of this was to gather authoritative information from senior and managerial personnel and not just personnel in the junior cadres.
It should be stated that the four states and the Federal Capital Territory chose for this study were selected using the convenience sampling technique because it afforded the researcher easy access to respondents and was also cost-effective. The instruments of data gathering employed for this study are in-depth interviews and Focus Groups Discussions. The Focus Group Discussion Guide (FGDG) was used to guide the discussions with the selected Nigerian citizens about the energy poverty situation of the country. The guide also ensured that all the discussions made in the focus group discussion achieved the objectives of the study. In addition, the interview guide was used as a tool during the conduct of the in-depth interviews on key players of the energy sector. The interview guide enabled the researcher to ensure that all the important areas were covered and that questions revolved around the research questions. The draft copies of the In-depth Interview Guide and Focus Group Discussion Guide were submitted to the project supervisor for necessary corrections, additions and amendments. This helped the researcher improve upon the research instrument and enhance the validity of data (Awosusi and Awolusi, 2014). Data were collected using the In-depth Interview Guide and Focus Group Discussion guide as guides.

For the conduct of the interviews and the focus group discussions which were conducted on the staff of power agencies in the chosen locations- Oyo, Ogun, Lagos, Osun and the Federal Capital Territory. The researcher without the aid of any research assistant conducted all of the scenarios of data collection because the number of a respondent interviewed or spoken within the focus group discussion were not many and there was sufficient time to conduct all of the interviews and focus group discussions. Furthermore, the researcher with the aid of the interview guide gathered supplementary information about citizens' thoughts and opinions about the current energy poverty in the nation. Each of the one-on-one interviews with selected respondents is expected to span between 30 to 45 minutes. For every interview session, the researcher made use of a recording device to record interviews and discussions. Data gathered were grouped, analyzed and interpreted by extracting data from tape-recorded responses of the interviewed personnel of power agencies as well as the (50) randomly chosen citizen respondents. The same method was conducted on the tape-recorded audio excerpts of the focus group discussions all of which were discussed against the various research questions which the interview or discussion treated. This was done by extracting relevant quotations to back up presented data where deemed appropriate.

4. Results and Discussion of Findings

Demographic Analysis: Certain demographic information was considered vital in choosing the respondents who answered and discussed the questions and issues raised in the fieldwork of this study. Some of the features that were apparent in most of the respondents and discussants were that they were personnel working in any of the three arms that constitute the Nigerian electricity structure- which include the power generation companies, the transmission companies and the distribution companies. In-depth interviews were specifically directed at key decision-makers and personnel in the various states' power offices that were visited for this study. These include the Head of the Technical Department of the Ibadan Electricity Distribution Company, Ibadan, the Assistant General Manager of Ibadan Electricity Transmission Office, Ibadan, the Assistant General Manager of the National Electricity Transmission Company, Osun state, and the General Manager of the Ikeja Electricity Distribution Company, Ikeja, Lagos state. Others that were also visited include the Assistant General Manager of the Abuja Electricity Distribution Company, the Federal Capital Territory, Abuja. It is worth stating at this juncture that in the course of this study, it was discovered that Ogun state is supplied electricity from the Ibadan Electricity Distribution Company, thus they fall under the aegis of the Ibadan Distribution Company. Thus, the interviews conducted for personnel in Ibadan, Oyo state also represents that for Ogun state. Consequently, each research question is succinctly and discussed and answered in the subsequent paragraphs, about the opinions of the respondents and discussants about each of the research questions.

Research Question One: What are the Challenges that Militate Against the Growth of Power Generation in the Electricity Sector of the Country: An interview session with the Head of the Technical Department of the Ibadan Electricity Distribution Company, Ibadan revealed this: The Nigerian electricity structure is divided into three arms, that is, the generation, the transmission and the distribution

organizations, with each of these organizations encountering different forms of challenges. But in the generation arm of the Nigeria electricity structure, the cost of power generation is so huge and the generation arm is currently encountering insufficient financial capabilities to purchase huge power generating sets or maintain the existing ones. He further added that another challenge that the overall electricity system in the nation is currently encountering, a challenge that makes the system incapable of performing optimally are the losses known in the technical parlance as the (ATC & C) Aggregate Technical Commercial or Collection Losses. These are the total losses that the electricity system witnesses in the course of supplying electricity. In his attempt to explain the term ATC & C losses, he explained that technical losses occur in the area of electricity transmission, where the transmission companies shoot out a particular volume of electricity, while the end-user receives a decreased volume of electricity due to the distance the voltage has traveled, this voltage drop consequently leads to a reduction in the quantity of power that reaches the end-user. This loss is especially higher in Nigeria because of the obsolete transmission lines that the transmission companies utilize.

The collection losses however occur when consumers pay a fraction of their electricity bills, causing their debts to continually increase and consequently taking adverse tolls on all of the arms of the nation's electricity structure as the distribution companies serve as the revenue collector on behalf of both the power generation companies and the transmission companies. Therefore, in his estimation, the challenges that are currently acting as deterrents to the progress of power generation in the electricity sector of the country are the insufficient financial capacity to build more power generation plants and maintain existing ones, the unattractive nature of the nation's electricity sector caused by the commercial unavailability of the sector and finally, the low cost of selling units of electricity as well as consumers' indebtedness that deprives the system sufficient resources to successfully perform its operations. In another interview with the Assistant General Manager of Ibadan Electricity Transmission Office, Ibadan, he stated that: The challenges bedeviling the transmission arm of the electricity sector are numerous. He enumerated them as the challenges of outdated equipment and transmission lines, vandalism and theft of transmission equipment at transmission stations and the inability to collect funds directly from electricity consumers and the inability of the distribution arm of the electricity sector to accurately remit funds due to the transmission company.

He explained that the current transmission poles and lines are very obsolete and require very urgent overhauling to avoid danger to lives and property and further revealed that most of the transmission lines and poles have been in use for over five decades. He also added that due to the overuse of this equipment, there were frequent occurrences of national grid shutdown and constant loss of electricity units from the point of transmission to the point of consumption. Furthermore, he added that destruction and theft of transmission poles, lines and other related equipment, especially in the Niger-Delta region also contribute adversely to the development of the electricity sector in the nation. In the aspect of the inability to collect direct funds from consumers, he revealed that the electricity distribution companies were the only arms allowed to collect funds for the three arms of the nation’s energy sector. He however revealed that on frequent occasions, personnel in the distribution companies tampered with the funds or failed to make appropriate remunerations to the transmission companies. A situation, which he was quick to state, was very bad for them as it continually affects their ability to perform optimally, thereby negatively affecting power transmission in the nation. In another in-depth interview conducted on the Assistant General Manager of the National Electricity Transmission Company, Osun state.

He revealed that the Headquarters of the National Transmission Grid, located in Osun state is home to, numerous uneducated people and a largely agrarian population that utilizes electricity mainly for domestic and residential purposes. He also gave this insightful professional opinion saying: I believe that the location of this national transmission grid in this state is a big mistake. I mean, the distance from the source of power generation to this place is just too enormous. Kanji Dam is in Niger state and this is Osun state. Can you imagine the distance that energy travels before getting to this place, and then subsequently transmitted to other parts of the country? In his opinion, the national transmission grid should have been sited either in Niger state or very close to the source of power generation, while other smaller transmission stations are constructed in other parts of the nation. Moving over to Lagos state, in an interview conducted with the General Manager of the Ikeja Electricity Distribution Company, Lagos State, he revealed challenges peculiar to his state, alongside relating these challenges to the factors that militate against the progress or growth of the electricity sector in Nigeria. In his revelation: Lagos State is a very industrialized state the most industrialized

state in West Africa and some of the challenges that we constantly encounter are: Insufficiency of electricity units supplied to us from the power generating company.

This insufficiency is largely due to the huge volumes of customers in this state – both residential and industrial customers alike. On a final note, the interaction with the Assistant General Manager of the Abuja Electricity Distribution Company indicated that the challenges that reduce the pace of growth in the sector include: The unwillingness of consumers to pay for their energy consumption, the inadequate knowledge of the electricity sector and how it works, the poor financial capacity of a large segment of Nigerian citizens and a couple of other long-standing technical challenges. From the findings of this research question, it is evident that the pervading challenges that stand in the way of the development of the electricity sector in the country are the insufficient financial capacity to purchase huge power generating sets or maintain the existing ones, the business and commercial unavailability of the electricity sector that makes it unattractive to investors, consumers' unwillingness to pay for electricity units at cost-reflective prices. Other challenges include the theft and vandalism of transmission equipment, outdated equipment and transmission lines, insufficiency of electricity units that leads to constant power outages, inadequate consumers' knowledge of the electricity sector and how it functions and very importantly, the widespread poverty in the nation that makes it difficult for consumers to pay for their electric utility bills and explains their reluctance to pay for electricity.

Research Question Two: What Strategies or Models can be Used to Improve Power Generation and Distribution in Nigeria: In similar order as the previous research question, the Head of the Technical Department of the Ibadan Electricity Distribution Company, Ibadan opined that the nation's electricity sector requires restructuring to be made more commercially attractive to investors. In his opinion, the restructuring requires well-coordinated and in-depth education of electricity consumers and stakeholders so that they can grasp the inner workings of the nation's electricity system and understand the significance of their choice to pay or to not pay for their electric utility bills. This education will also inform consumers of the urgent need to increase the unit cost of electricity, to make the system more efficient and cause a win-win situation for both the consumers and the three arms that make up the nation's electricity system. Furthermore, he suggested decentralization of the national grid; that is a situation where each region, state or geopolitical zone in the country owns a grid. This is unlike the current situation in the country where there is a single national grid located in Osun state that monitors all the activities of electricity transmission in the country. Adding that the obsolete and ill-functioning conductors and lines are replaced and locations.

He highlighted that the disadvantage of this single-structure national grid system is that whenever there is a system failure or system collapse, it shuts down power transmission to every part of the nation due to its central nature, therefore affecting the total economic wellbeing of the country. However, in a situation where the national grid is decentralized, such system collapse will have minimal adverse impact assuming the grid is decentralized into states or regions. He further added that there are other sources of electricity that can be utilized to shed load off the nation's already overloaded electricity grid. Some of these electricity sources are renewable energy, embedded electricity generation of up to 500 Kilowatt or 1 Megawatt for already specified locations who on the installation of these embedded power plant, are taken off the national grid. Other sources are gas flared power generation, wind and solar electricity sources of electricity. Meanwhile, in response to this research question, the interview conducted on the Assistant General Manager of Ibadan Electricity Transmission Office, revealed that in a bid to improve power generation and distribution in the country, the transmission arm has to be well equipped and improved upon. Especially the hinterlands and countryside be added to the national electricity grid so that they can benefit from it.

He also suggested that the Federal Government of Nigeria should not leave the sector to the whim and caprice of private owners, but rather constantly intervene in the sector through constructing and taking on very capital-intensive projects that seem too huge for private investors. Furthermore, he revealed that widespread sensitization is required to be conducted on consumers so that they can appreciate and understand the nation's current electricity situation and also understand the logical reason for the need to increase the cost of electricity per unit so that each of the arms in the electricity sector can possess relatively adequate funds to improve their services, which will also lead to an improvement in the nation's electricity supply and generation. In an interview with the Assistant General Manager of the National Electricity Transmission Company, Osun state, he revealed that for development and growth to come to Nigeria's electricity sector,

there has to be a complete overhaul of the national transmission grid. Beginning with decentralizing the national grid from one, which is located in Osun state, to other smaller unit, which can be sited either according to the nation's geopolitical zones or across the thirty-six (36) states of the federation.

Furthermore, he suggested the creation of a special commission strictly dedicated to attending to the challenges, of Nigeria's electricity company. In his opinion, this commission should be an agency of the federal government as he feels that the commission can be usurped if it is a private entity. In addition, he explained that the reason behind his clamor for a special commission dedicated to attending to the country's electricity challenges is that the system is bedeviled with so many challenges that can distract electricity personnel from their main jobs of providing electricity while attempting to solve these challenges. Thus, he suggested that while electricity personnel focuses on the generation, transmission and distribution of electricity, the commission and its staff are solely saddled with the responsibility of meeting these challenges. He concluded his interview session by suggesting that there be the economic revitalization and the creation of jobs so that citizens can be financially capable enough to perform their financial obligations to the electricity sector, which will also transform into the improvement of the sector. In expressing his opinion while attempting to answer this research question.

The General Manager of the Ikeja Electricity Distribution Company, Ikeja, Lagos, state commented that: Firstly, there ought to be a complete change of most of the equipment utilized in the three arms of the electricity, industry. Secondly, there ought to be dedicated huge financial investments in all the arms of the electricity sector of the country. Thirdly, there ought to be strict measures put in place to punish consumers who tamper or bypass their meters so that their actions can be curtailed and so that optimal funds can be generated for all the arms of the electricity distribution. Lastly, the unit cost of electricity should be revised upwards, to reflect the cost of production and afford the different arms of the sector the chance of profit-making. Moving to the Federal Capital Territory, the Assistant General Manager of the Abuja Electricity Distribution Company further corroborated the suggestions mentioned by the General Manager of the Ikeja Electricity Distribution Company. He however added that the nation should Endeavour to migrate from turbine-powered electricity to other green and renewable electricity sources. This he said would free up the already overloaded national grid, thereby making electricity more available to consumers. Thus, from the findings of this research question above, one can infer that to improve the state of electricity in Nigeria, there has to be a restructuring of the system to make it more commercially viable and attractive to investors – both home and abroad.

In addition, there have been calls for well-coordinated sensitization campaigns that will educate and inform electricity consumers about the structure and inner workings of the electricity system and how their choices to pay their electricity bill or choices not to pay to affect the daily operations of the sector. Furthermore, decentralization of the power grid is required so that the creation of other monitoring transmission units can be ascertained. This decentralization will lead to the birth of some level of electricity stability across the country as voltage load will be shared among these decentralized grids, thereby reducing the spate of system collapse that is currently a frequent feature in the nation's electricity system due to the overload of the single national grid. Other strategies to improve electricity as suggested by the respondents include the establishment of a commission dedicated to solving the challenges of the electricity sector, complete equipment overhaul of the transmission arm of the sector, the increment of the unit cost of electricity to provide more funds for the electricity sector, switching from the turbine-powered electricity generation to newer and healthier energy sources such as renewable energy and finally, increasing the economic welfare of the citizens so that they can be financially independent enough to pay for their electricity bills without resorting to vandalism or theft of electrical machinery or meter bypassing and other actions that short change the revenue generation of the electricity sector.

Research Question Three: What are the Effects of Energy Poverty on the Economic Growth of the Country: To answer this research question, both in-depth interviews and Focus Group Discussions were conducted to elicit responses from both electricity personnel and citizens on the effects of energy poverty on the economic growth of the nation. It is important to indicate at this juncture that the in-depth interviews were conducted on the electricity personnel, while the Focus Group Discussion was conducted on ordinary citizens to gather their opinions about energy poverty and its impact on the nation's economic wellbeing.

Findings from the focus group discussions conducted reveal that most citizens strongly believe that insufficiency or poverty of energy had adverse effects on them as individuals and the society as a whole. One of the ten (10) discussants in Ibadan, Oyo State, who is currently a bike transport operator (Okada rider) revealed that if he could get a constant supply of electricity, he would begin his profession as a barber.
He claimed that the reason he was in the bike transportation business was that the cost of power generation sets and fueling made the salon business unviable; hence, he had to look for another alternative for survival. Another participant in Ibadan who is a secondary school had this comment to make: Once the challenge of electricity is solved in this country, so many other problems will automatically get fixed. When I was younger, I remember that there used to be many type factories along the Oke-Ado – Molete road, but these factories have long closed shop because of the high cost of production using power-generating sets. Now, it is churches that have taken over these factories. The painful consequences of the closure of these businesses are that more people lose their jobs and their sources of livelihood and are thrown into lives of hardship together with their families and dependents. The snowball effect of all of these is that there is a high level of hunger and crime in the land. The consensus among the participants of the focus group discussion in Ibadan is that energy poverty adversely affects the Nigerian economy and its people as industries and factories produce at a higher cost of production, thereby placing the burden of their production costs on the citizens. They also agree that constant electricity would bring alteration to the status quo as the cost of production will reduce, more factories and industries will be created consequently leading to the availability of jobs and thus, better life. In another discussion conducted in Lagos state, the discussants revealed that the importance of electricity is important not only to the social wellbeing of Nigerian citizens.

But also to the economic sustainability of the country. One of the participants who work in a beverage manufacturing plant expressed the large expense that his principals, accrue as a result of purchasing diesel to power their huge power plants. He added that because of the large power costs of their plant for production and also makes profits from their business Endeavour; his principals thus transfer the bulk of the costs to their consumers. Hence, products that would have cost less if there were constant electricity now cost twice as much because of the nation's erratic power supply. At the end of this discussion, the consensus was that the economic consequence of energy poverty is negative, as prospective investors into the nation's economy opt out of taking the risk to invest in Nigeria after completing their feasibility studies and discovering that electricity would be a challenge in profiting maximally from their business Endeavour. In the discussion conducted in the Federal Capital Territory, Abuja, the consensus was that electricity poverty portends backwardness and stagnancy to the social wellbeing of Nigerians as well as to the Nigerian economy. They pointed out that some years back, about a decade ago, Nigeria used to be called the giant of Africa. Unfortunately, the characteristics that made the nation have this title have gone as most of the industries that used to reside in Nigeria have relocated to neighboring African nations. The Head of the Technical Department of the Ibadan Electricity Distribution Company, Ibadan in response to this research question during the interview indicated that electricity poverty is harmful.

To the economic growth and development of the nation in his word, as an electricity distributor that services many industries that require very large units of electricity in Ibadan: I am aware of the large expenses that these industries have to make to power there, generating sets to augment the unavailability of electricity. It is disturbing to note that whenever these industries run on their generating plants, it costs as much as three times if they were running on electricity from the national grid. The unfortunate situation however is that there is no constant electricity supply anywhere in the nation. Except for huge organizations that generate their electricity and are not connected to the national grid. He also added that due to insufficient electricity, otherwise known as energy poverty, the pace of technological advancement is slower as there is no sufficient electricity to power and sustain Research and Development in any part of the country. The health sector too suffers from this energy poverty as most hospitals; including government-owned hospitals have to rely on power generating sets, which can barely power their office bulbs and little other equipment, to run their hospital and laboratories. In the various interviews with all the key electricity personnel on this research question, the consensus was that energy poverty or inadequate electricity hurts the socio-economic wellbeing of the nation. They also reach a consensus that energy poverty or inadequate electricity stunts the technological development of the nation, thereby causing the nation to be dependent on the technological advancement of other nations, without developing its own. This suggests to some extent that despite the

availability of affordable electricity, certain persons still prefer to maintain their consumption of harmful sources of energy.

Discussion of Findings: From the various findings discussed above, it is evident that there are challenges in Nigeria's energy sector and the study's findings further revealed that despite these numerous challenges, there are solutions that can be adopted to save the situation and increase the generation and distribution of electricity. This section of the study will briefly discuss this study's findings of the empirical researches referenced earlier in the conduct of this research. In the focus group discussion conducted in five different parts of the country as highlighted in chapter three of this study, the discussants stressed the adverse effects of electricity poverty on the nation. Their revelations and opinions confirmed Szakonyi & Urpelainen, (2015) research that discussed the overall social and commercial effects of energy poverty where they emphasized the existence of widespread power insufficiency among traders in Patna, India. The researchers just as respondents of the focus group discussions opined that solving the challenge of power insufficiency with frequent electricity could boost their sales and increase their living standards. Another study conducted by (Pachauri et al., 2012) revealed that an increment in the accessibility to energy led to appreciable socio-economic advantages for energy-deprived persons.

This study, which was conducted in India, further corroborates the opinion of the Head of the Technical Department of the Ibadan Electricity Distribution Company, who stated clearly that constant availability of electricity in the country will lead to the overall betterment of life in all ramifications in the country. He revealed that constant electricity will automatically make things work and generally make life easier, thus leading to improved social and economic wellbeing. In addition, (Pereira et al., 2011) reported similar effects in Brazil, which were achieved through sustained action of the authorities in the expansion of dependable electricity. On the question of strategies to adopt to improve electricity generation in Nigeria, (Wang, Wang and Wei, 2015) in their research discovered proof of a reduction in China's electricity poverty due to an increment in electricity servicing availability and affordability and effectiveness of electricity. All of the interviewed top management staff of Nigeria's electricity sector further confirms that electricity poverty and insufficiency can be reduced if all hand can come on deck to jointly rebuild and reinvest in the nation's electricity sector and if more electricity servicing plants can be constructed. On the contrary opinion, however, a study conducted by Tang and Liao, (2014) revealed that, despite the widespread movement towards massive energy empowerment, in terms of public connection to electricity and the diminishing of energy poverty, interior China's reliance on harmful solid fuels remained on the high side.

5. Summary, Conclusion and Policy Recommendations

Summary: This study examined the energy sector of Nigeria, while concomitantly highlighting the nexus, between electricity or energy and its effects on both human advancement and a larger scale, financial and socio-economic development. It investigated the various challenges that impede the development of the nation’s energy sector, discussed strategies and roadmaps that can improve the current state of power generation and distribution in the country and also analyzed the effects of energy poverty on the economic growth of the county. To achieve the aims and objectives of this research work, the qualitative research method was employed. The study conducted five (5) in-depth interviews on key individuals in a top management position in various arms of the country's electricity sector and also conducted five (5) Focus Group Discussions consisting of mainly ordinary citizens and consumers of electricity who are affected by the electricity situation in the country. This was necessary to get the opinions of not only the personnel working in the nation's electricity sector, but also hear the opinions of consumers who are directly affected by the availability or unavailability of electricity.

Findings from the first research question revealed that the pervading challenges that impede the development of the electricity sector in the country are the insufficient financial capacity to purchase huge power generating sets or maintain the existing ones, the commercial unavailability of the electricity sector that renders it unattractive to prospective investors, consumers' unwillingness to pay for electricity units at cost-reflective prices. Other challenges discovered include the theft and vandalism of transmission lines and equipment, obsolete equipment and transmission lines, insufficiency of electricity units, thereby leading to constant power outages, inadequate consumers' knowledge of the electricity sector and its inner workings

and very importantly, the widespread poverty in the nation that makes it difficult for consumers to pay their electric utility bills and also explains their reluctance to pay for electricity. Other discoveries concerning the second research question treat strategies that can be employed. To improve electricity generation and distribution in Nigeria include the restructuring of the system to make it more commercially viable and attractive to investors – both home and abroad.

Other strategies include the conduction of well-coordinated sensitization campaigns that will educate and inform, electricity consumers about the structure and inner workings of the electricity system and how their choices to pay their electricity bill or choices not to pay to affect the daily operations of the sector. Furthermore, in a bid to improve power generation and distribution in the country, decentralization of the power grid is required so that the creation of other monitoring transmission units can be ascertained. This decentralization will lead to the birth of some level of electricity stability across the country as voltage load will be shared among these decentralized grids, thereby reducing the spate of system collapse that is currently a frequent feature in the nation's electricity system due to the overload of the single national grid, located in Osun state. Other strategies to improve electricity include the establishment of a commission dedicated to solving the challenges of the electricity sector, complete equipment overhaul of the transmission arm of the sector.

The increment of the unit cost of electricity to provide more funds for the electricity sector, switching from the turbine-powered electricity generation to newer and healthier energy sources such as renewable energy and finally, increasing the economic welfare of the citizens so that they can be financially independent enough to pay for their electricity bills without resorting to vandalism or theft of electrical machinery or meter bypassing and other actions that short change the revenue generation of the electricity sector. Finally, findings from the third research question indicate that most of the respondents gave similar consequences of energy poverty saying that energy poverty, apart from having negative effects from the individualistic perspective also goes further to taking its toll on the national economy by causing a hike in the cost of production, which in turn leads to a hike in the cost of living and therefore seemingly continues the vicious circle of poverty that has been in the Nigerian society for a very long time. They also reach a consensus that energy poverty or inadequate electricity stunts the technological development of the nation, thereby causing the nation to be dependent on the technological advancement of other nations, without developing its own.

Conclusion: The findings of this research indicate that energy poverty possesses an adverse effect on both the individual and economic well-being of the nation. Besides, the research revealed that the Nigerian electricity sector is divided into three-arm that is the electricity generation companies, transmission companies and distribution companies, all of which possess their peculiar challenges. An aggregation of all the interviews and discussions conducted in the course of this study revealed the challenges that bedevil the different arms of the nation's electricity sector. It also suggested strategies and roadmaps for the improvement of electricity generation and distribution in the country. Finally, the interviews and discussions all made allusions to the fact that insufficient electricity or energy poverty negatively affected the individual's social wellbeing, just as it adversely affects a nation's economic wellbeing.

Recommendations and Policy Implications: This study's findings necessitate that the following recommendations be made to serve as some form of aid to the prospective beneficiaries of the study. Firstly, the nation's electricity sector requires restructuring to be made more commercially attractive to investors. Most of the electricity officials interviewed referred to the fact that the current unit cost of electricity is not cost reflective, thus suggesting that the electricity sector is operated at a loss. Secondly, there is an urgent need for the decentralization of the power grid. This decentralization will lead to the birth of some level of electricity stability across the country as voltage load will be shared among these decentralized grids, thereby reducing the spate of system collapse that is currently a frequent feature in the nation's electricity system due to the overload of the single national grid, located in Osun state.

In addition, adequate security measures should be taken to protect the transmission cable and lines of the transmission companies, to avoid thefts or destruction of this equipment. More so, there should be massive economic revitalization and creation of employment, so that electricity consumers will be financially capable of paying their electricity bills and so that the rate of vandalism and theft of electricity equipment will

diminish. Furthermore, there is a need to consider an increment of the unit cost of electricity to provide more funds for the electricity sector. This is because, from the findings of this research, the current unit cost of electricity is far below the cost of production, thus it cannot ensure the improvement of the electricity sector, and rather it will lead to a continuous deterioration of the nation's electricity sector. Moreover, based on the findings of this research, there should be the creation of an independent body charged with the sole responsibility of attending to the challenges of the electricity sector.

This will create room for core electricity staff to focus on the business of electricity provision, transmission, and distribution, while this independent body swings into action as soon as there are anomalies or problems in the system. This independent body is especially required at the current status quo of electricity in the country because the country is currently witnessing so many challenges that appear larger than the current electricity staff can handle. In addition, electricity consumers need to jettison the current practice of indebtedness and learn the habit of constantly paying for their electricity bills. Findings also revealed that concerted sensitization needs to be conducted on electricity consumers so that they can understand the dire and peculiar situation that electricity in the country is in and the need for them to fulfill their end of the bargain, which is the ideal payment of their power bills so that the electricity organization will be funded enough to ensure a semblance of provision of constant electricity. Other important recommendations include switching from turbine-powered sources of electricity to other modern and healthier electricity sources such as wind energy, solar energy and other renewable sources of electricity.

This switch will gradually ensure continued movement away from the country's obsolete system of electricity, to a more modern and more stable source of electricity. Also, there should be realistically prosecutable sanctions against any individual or corporate entity that breaks any law regarding the use of electricity in Nigeria. For example, there are many cases of meter tampering or bypassing and illegal connection to the electricity grid. But the unfortunate situation currently is that such illegal actions are rarely punished, thereby causing the continued growth of these illegal activities. However, when prosecutable sanctions are put in place, they will serve as deterrents to others. In conclusion, there should be a situation that allows for every arm of the electricity sector, that is, the generation, the transmission and the distribution arms, to be able to collect charges for their duties. The current situation is that the electricity distribution company is the only arm that collects revenue on behalf of the other two. There have however been concerns raised by the other two arms about the optimal remittance of revenue due to them and as such have demanded a structure that allows them to collect their revenue. This is highly recommended, as it will lead to the avoidance of one arm accusing the other of its inability to perform optimally due to financial incapacitation.

There is no doubt that there have been many pieces of literature, account and academic work on energy poverty across the world and to some extent, energy poverty in Nigeria. Other works have focused largely on energy poverty in Europe or other aspects of energy poverty even in Nigeria, but none of these materials, especially as related to Nigeria has treated energy poverty and its influence on both individual and economic wellbeing of the nation. This study is therefore intended to fill this academic vacuum created by the non-existence of sufficient empirical literature on the effects of energy poverty on the individual and economic wellbeing of Nigeria. The study is intended to critically analyze the challenges against the development of constant electricity in the country and consequently proffer solutions that can efficiently tackle these identified challenges. None of the existing studies provides the information contained in this research. However, in the course of conducting this research, the researcher discovered that there was a dearth of indigenous materials in this area of study – energy poverty especially about the practical ways it affects Nigeria. The researcher discovered that most of the available resources on energy poverty are from Europe and Asia. Thus to understudy its peculiarities in the country, more scholarly work should be conducted in the area of energy poverty, especially by Nigerian scholars.

References

Andadari, R. K., Mulder, P. & Reitveld, P. (2014). Energy Poverty Reduction by Fuel Switching. Impact Evaluation of the LPG Conversion Program in Indonesia. *Energy Policy*, 66(1), 436–449.

Awolusi, O. D. & Atiku, O. S. (2019). Business Process Re-Engineering and Profitability in the Nigerian Oil and Gas Industry: The Mediating Influence of Operational Performance, *Information Management and Business Review*, 11(3), 13-26.

Awolusi, O. D. (2021). Economic Growth and Socioeconomic Sustainability in BRICS Countries: A Vector Error Correction Modeling Approach, *Journal of Economics and Behavioral Studies*, 13(3), 1-23.

Awolusi, O. D., Pelser, T. G. & Adelekan, A. S. (2016). Determinants of Foreign Direct Investment: New Granger Causality Evidence from Asian and African Economies, *Journal of Economics and Behavioral Studies,* 8(1), 104-119.

Awosusi, O. O. & Awolusi, O. D. (2014). Technology Transfer, Foreign Direct Investment and Economic Growth in Nigeria, *Africa Development,* 39(2), 1–20.

Day, R., Walker, G. & Simcock, N. (2016). Conceptualizing Energy Use and Energy Poverty using a Capabilities Framework. *Energy Policy*, 93(1), 255–264.

DECC (Department for Energy and Climate Change Report). (2015). DECC, London.

Eleri, E., Ogwu, O. & Onuvae, P. (2012). Expanding Access to Pro-Poor Energy Service in Nigeria.

Fahmy, E. (2011). The definition and measurement of fuel poverty. A briefing paper to inform consumer focus's submission to the Hills fuel poverty review, University of Bristol.

González-Eguino, M. (2015). Energy Poverty: An Overview. *Renew. Sustain. Energy Rev*, 47(1), 377–385.

Heindl, P. (2015). Measuring fuel poverty: general considerations and application to German household data. *Finanz: Public Finance. Anal*, 7(1), 178–215.

ICEED. (2010). Low Carbon Jobs in an Interconnected World, www.iceednigeria.org

IEA, UNDP and UNIDO. (2010). Energy Poverty. How to make Modern Energy Access Universal? Special Early Excerpt of the World Energy Outlook for the UN General Assembly on the Millennium Development Goals, International Energy Agency, Paris.

IEA (International Energy Agency). (2011). Energy Poverty: The Missing Millennium Development Goal? Paris: International Energy Agency.

Jean, P. H. & Marc, D. F. (2007). From a Forced Dependency to Positive Co-operation in the Field of Energy; WEC Energy Future in an Interdependent World.

Krizanic, F. (2007). The European market of Electricity and Natural Gas. EIB forum, Ljubljana

Lefkothea, P. & Dimitris, K. (2018). A Stochastic Model for Energy Poverty Analysis. Energy Policy, 153–164.

Legendre, B. & Ricci, O. (2015). Measuring fuel poverty in France: which households are the most fuel vulnerable? *Energy Econ*, 49(1), 620–628.

Mbisiogu, F. (2013). EXPOSED: OBJ spent N1.6trillion on power! [Online] Nigeria Standard Newspaper Available at: http://nigeriastandardnewspaper.com/ng/exposed-obj-spent-n1-6trillion-on-power/ UNDP NBS-CBN-NCC. Collaborative Survey (2011) Annual Socio-Economic Survey Report.

Nussabaumer, P., Bazilian, M. & Modi, V. (2012). Measuring energy poverty: focusing on what matters. Renew. Sustain. *Energy Rev,* 16(1), 231–243.

Odoko, F. O. (2003). The Pricing of Crude oil and refined products in the Nigerian Economy: In CBN's Contemporary Economic Policy Issues in Nigeria.

Odunlami, S. A., Awosusi, O. O. & AwolusiI, O. D. (2017). The Influence of Leadership Styles on Employees' Performance: A study of Selected Private Universities in Ogun State, Nigeria, *Global Journal of Commerce and Management Perspective,* 6(2), 5-13.

Oladejo, M. J. & Awolusi, O. D. (2017). Effect of Work-Family Role Conflicts on Employees' Commitment and Organisational Performance: A study of AKLAD Interlink concept, Nigeria', *Global Journal of Commerce and Management Perspective,* 7(2), 81-96.

Olayisade, A. & Awolusi, O. D. (2021). The Effect of Leadership Styles on Employee's Productivity in the Nigerian Oil and Gas Industry, *Information Management and Business Review*, 13(1), 47-64.

Pachauri, S. (2012). Energy Access for Development. The Global Energy Assessment: Toward a More Sustainable Future, IIASA, Laxenburg, Austria and Cambridge University Press, Cambridge, UK and New York, USA.

Pereira, M. G., Freitas, M. A. V. & Da Silva, N. F. (2011). The Challenge of Energy Poverty: Brazilian Case Study. *Energy Policy*, 39(1), 167–175.

Sadath, C. A. & Acharya, H. R. (2017). Assessing the Extent and Intensity of Energy Poverty using Multi-dimensional Energy Poverty Index: Empirical Evidence from Households in India. *Energy Policy*, 102(1), 540-548. www.elsevier.com/locate/enpol

Sanusi, A. & Owoyele, S. G. (2016). Energy Poverty and its Spatial Differences in Nigeria: Reversing the Trend. Africa-E.U Renewable Energy Research and Innovation Symposium. Tlemcen, Algeria.

Schuessler, R. (2014). Energy poverty indicators: conceptual issues - Part I: the ten-per- cent-rule and double median/mean indicators. SSRN Electron. J. http://www.ssrn.com/abstract=2459404〉.).

Sen, A. (2014). Global Warming is just one of many Environmental Threats that demand our attention. New Republic, 〈http://www.newrepublic.com/article/118969/environmentalists-obsess-about-global-warming-ignore-poor-countries〉

Sher, F., Abbas, A. & Awan, R. U. (2014). An Investigation of Multidimensional Energy Poverty in Pakistan: A Province Level Analysis, *International J. Energy Economics and Policy*, 4(1), 65-75.

Sissoko, M. (2012). Corruption stalls Nigeria's Economic Growth – UN. 2013 International Anti-Corruption Day in Abuja. [Online] *The Sun Newspaper*, Available at: http://sunnewsonline.com/new/?p=45692

Sovacool, B. K. (2013). Confronting Energy Poverty behind the Bamboo Curtain: A Review of Challenges and Solutions for Myanmar (Burma). *Energy Sustain. Dev,* 17(1), 305–314.

Szakonyi, D. & Urpelainen, J. (2015). Energy Poverty among Urban Street Vendors in India: Evidence from Patna, Bihar. *Energy Sustain. Dev*, 24(1), 44–49.

Tang, X. & Liao, H. (2014). Energy Poverty and Solid Fuels use in Rural China: Analysis Based on National Population Census. *Energy Sustain. Dev*, 23(1), 122–129.

UNDP (United Nations Development Programme). (2010). Energy for Sustainable Future. United Nations Development Program New York, USA.

Wang, Wang. & Wei, K. (2015). Energy Poverty in China: An Index-Based Comprehensive Evaluation. Renew. Sustain. *Energy Rev,* 47(1), 308–323.

World Bank. (2016). World Development Indicators: Power Outages in Firms in a Typical Month. www.data.worldbank.org/indicator/IC.ELC.OUTG

Information Management and Business Review (IMBR)
Vol. 13, No. 3, September 2021 (ISSN 2220-3796)

Political Relationship Marketing: An Examination of Internal Relationship Management in Ghanaian Political Parties

Ibrahim Sayibu Nnindini & Kobby Mensah
University of Ghana, Legon, Accra, Ghana
nnindini@yahoo.com, kobbymensah@ug.edu.gh

Abstract: In recent times political parties appear to be focusing narrowly on winning elections to the detriment of effective management of their intra-party relationships. The neglect of managing relationships is having a negative effect on parties, hence this study. The study looked at the practice of political relationship marketing in the two leading parties in Ghana, focusing on micro-interactions at the constituency level. Twenty-four party executives were drawn from eight constituencies for interview. Thematic analysis was carried out to identify relationship marketing practices in the parties. The findings demonstrate the presence of some political relationship marketing antecedents. A fully-fledged political relationship marketing practice is however absent.

Keywords: *Political relationship marketing, Political marketing, internal party management, Communication*

1. Introduction

This study is situated in Political Relationship Marketing (PRM), instigated by the internal wrangling that has been rocking the political parties in Ghana in recent years despite claims of political marketing practices (Hinson & Tweneboah-Koduah, 2010; Mensah, 2017). In our view, the wrangling in the parties is a result of obsessive fixation on winning elections to the detriment of the management of internal relationships (Lees-Marshment, 2004), which is least explored both in practice and in the theory of political management in Ghana. It is now an established knowledge globally that politics is designed and promoted on marketing insight (Brown & Coates, 1996; Henneberg, 2004; Lees-Marshment, 2001; Mensah, 2017; Scammell, 1995; 1999), resulting in political marketing as academic and practice discipline. Since its emergence, political parties and candidates have utilized the political marketing concept in a number of ways (Lees-Marshment, 2019). According to Kotler and Keller (2012), one of the factors that accounted for the success of Barrack Obama in the 2008 United States elections was a well-designed and effectively executed marketing program.

They argue that the effective use of marketing is not by chance, but an output of meticulous hard work using state-of-the-art tools and techniques. It is however noted that Obama's campaign did not only deploy marketing in its 'managerial' sense where a good product, for example, was designed and distributed using voter insight but also built effective relationships for fundraising (Nickerson & Rogers, 2014). We see this development as a change in the role of political marketing, that is from "the science of influencing mass behavior in competitive situations" (Mauser, 1983, p. 5) to a new approach that seeks to establish, maintain and enhance long term political relationships at a profit for society, so that the objectives of individual political actors and organizations involved are met" (Henneberg, 2002, p. 103). This shift is necessary because the political marketing literature over the years has been heavily focused on the communication function of marketing (see (Baines & Egan, 2001; Les-Marshment, 2009; Lilleker & Jackson, 2013; Scammell, 1995; Wring, 1997); others tend to focus on the strategy dimension, (examples include, Bowler & Farrell, 1992; Lees-Marshment, 2001; 2004; Newman, 1994; 1999; O'Shaughnessy, 1990; O'Shaughnessy & Henneberg, 2002).

The relational approach to marketing has been under-explored in the political marketing literature (Henneberg & O'Shaughnessy, 2009), despite its potential benefits. Aside from the neglect of the political relationship marketing dimension, there are also very limited political marketing studies conducted at the local level (Reeves, 2009). We choose political relationship marketing as the conceptual framework for this study because we believe that alongside political marketing communication and strategy, there ought to be empirical data that broaden the appreciation of the organizational thinking and management processes of political parties. Advocates of the relationship theory, for example, Gronroos (2004), have argued that there is an end of an era for transactional exchange given its limitations in a number of fields in marketing, including the service sector. They further claim a paradigm shift towards long-term relationships underpinned by

intangible characteristics of the 'product' as opposed to the goods dominant character of the managerial approach to marketing (Grönroos, 2004).

According to Webster (1992), the modern view of marketing is an engagement process focusing on forming long-lasting mutually beneficial relationships. This includes relationships within the institution, referred to as internal partnerships – interaction between functional departments and amongst the firm and its staff (Blomqvist, Dahl & Heager, 1993; Morgan & Hunt, 1994). The limitations in the managerial approach to marketing, based on which a paradigm shift is proclaimed (Grönroos, 1996; Gummesson, 1987), and the subsequent proposals to adapt and develop frameworks capable of responding to those limitations, such as a shift towards a relational paradigm have also been noted in the political marketing literature (Henneberg, 2004; Lock & Harris, 1996; Moufahim & Lim, 2009). In the early years of the critiques and proposals, Hastings (2003) and Bannon (2003), for example, observed that relationship marketing was yet to be fully applied to the management of the parties and campaigns despite the potential benefits. In recent years, the application of relationship marketing (RM) to the management of politics is growing (Dean & Croft, 2001). In Ghana, political parties, especially the dominant ones.

The National Democratic Party (NDC) and the New Patriotic Party (NPP) have been rocked by serious implosions; resignations, suspensions, defections to other parties and breakaways. In most cases, aggrieved parties who are mostly constituency executives, allege a disconnect between the base and the leadership. Yet, at the macro-level of party political discourse, there is increasing talk of party unity on political platforms in the media. Hence, the need to examine the micro-level interactions between party leadership and the base to put the internal wrangling in perspective. Hence the research question "how do parties manage internal relationships at the constituency level?" Our study makes two significant contributions. First, the study contributes to the growing body of literature on political marketing by exploring the practice of relationship marketing by political parties in a developing country context. The novelty of the study stems from the application of the concept of relationship marketing which has been developed in the field of commerce to politics. Second, this study provides useful lessons for political actors (parties and candidates) as the findings reveal a deep-seated mistrust among party officers and members.

Objective of the Study: This research investigates the practice of political relationship marketing in the two leading parties in Ghana, focusing on micro-interactions at the constituency level. It notes that such studies are visibly missing in the literature on political marketing in Ghana (Hinson & Tweneboah-Koduah, 2010; Mensah, 2009). Mensah (2009), for example, notes that political parties and candidates in Ghana disseminate information about their policies, ideologies and campaign messages to the electorates in broadcast and narrowcast forms through the use of signs, sounds and symbols familiar to the voters. Political campaigns in Ghana are often multi-targeted, deploying broadcast and outdoor advertising, direct marketing and personal selling during elections. Whereas these marketing communication formed between parties and voters are heavily featured in the literature that of internal party management is nonexistent.

2. Literature Review

Political Marketing: The marriage between the disciplines of marketing and political science gave birth to a theory known as political marketing (Hughes & Dann, 2012). The object of which is to adapt the concepts and theories of commercial marketing to explain and understand party organizational behavior (Henneberg, 2008; Wring, 1997). According to Henneberg, Scammell and O'Shaughnessy (2009) political marketing despite its popularity in the US and Europe does not lend itself to an easy conceptualization. There are also blurred lines between political marketing, political communication and political management (Henneberg et al., 2009; Henneberg & O'Shaughnessy 2009). Similarly, Scammell (1999, p.718) observed that political marketing is "developing cross-disciplinary political/marketing/communication perspectives not simply to explain the promotional features of modern politics but as a tool of analysis of party and voter behavior." This has led to the description of political marketing as a virgin territory that is yet to be fully explored and its theoretical boundaries delineated (Johansen, 2016; Lees-Marshment, 2019). However, one certain thing is that political marketing could leverage the success of commercial marketing to positively influence the structure and operations of politics by delivering value to key target markets, i.e. members, voters, sympathizers and financiers while protecting the interest of other stakeholders such as the media and the

general public (Hughes & Dann, 2012). After all, "politics is a business of ideas, and marketing should not consider itself a neutral participant" (Hughes & Dann, 2012, p.357). Furthermore, scholars of marketing have argued in the past that any Endeavour that is competitive in nature.

(Whether for profit or not for profit) should be seen as being engaged in marketing (Bagozzi, 1975; Kotler & Levy, 1969; Kotler & Zaltman, 1971). Nonetheless the marriage of marketing and politics like any another union is not bereft of arguments, debates, squabbles and criticisms (Henneberg, et al., 2009). One of the major concerns of the critics of political marketing is its overall impact on democracy and democratic practice (Henneberg, et al., 2009; Johansen, 2012). They are those who think that political marketing is to be blamed for the decline in political astuteness (on the part of political leaders), lack of innovation, promotion of trivialities in political communication and deception of electorates among others (Bennett, 1992; Franklin, 1995; Henneberg & O'Shaughnessy, 2009; O'Shaughnessy. 2001; O'Shaughnessy, 1990; Savigny, 2006). For some, the rise of political marketing is responsible for the inimical developments in the political landscape, such as a decline in party activism and skeptical electorates or politics as a product designed for the media/market (Cappella & Jamieson, 1997; Franklin 1997; Swanson 1997). The extreme critics think political marketing is debasing democratic practice and not beneficial to the advancement of politics.

In general (Dermody & Scullion, 2003; Henneberg et al., 2009; Lilleker, 2005; Moloney & Colmer, 2001). O'Shaughnessy (1990, p.6) rebut these criticisms by suggesting that "the answer to the ethical question (regarding, political marketing) depends on the views of democracy we hold." Aside from these criticisms by political scientist which is largely focused on the ethical dimension of political marketing, marketing theorist has equally raised concerns about the weaknesses in the political marketing theory (Henneberg, 2004). For example, scholars from the European region have been consistent with their views that politics should be considered as a service product (Baines & Egan, 2001; Brennan et al., 2003; Harrop 1990; Henneberg 1997; Scammell 1999; O'Shaughnessy 2001) yet this has not been reflected in the literature which has been dominated by the managerial school of thought where the emphasis is on the marketing mix model (Johansen, 2012). Henneberg et al. (2009) observe that just as mainstream marketing is replete with varied conceptualizations of its dimensions and approaches, political marketing equally has different conceptualizations of its approaches. Examples of such conceptualizations include; Lees-Marshment's (2001) three typologies of product orientation, sales orientation and market orientation.

Dean and Croft (2001) marketing is the exchange, marketing is different and politics is different; Henneberg et al. (2009) selling oriented political marketing management, instrumentally oriented political marketing management and relational oriented marketing management. We will briefly expound on the classification of Henneberg et al. (2009) because of its relationship with our study. The selling orientation is akin to the orthodox value-laden and ideology-oriented politics (Henneberg, 2002; Kavanagh, 1995). With this orientation political offerings are often created based on the dominant core value system of the party (Henneberg et al., 2009). Contemporary examples of selling-oriented parties would be single-issue parties such as the 'Brexit Party' in the UK, Green Parties which use specific marketing tools to promote their cause. Marketing tools such as posters, mass communication through electronic media (O'Shaughnessy, 2005). According to Henneberg et al. (2009), the instrumental orientation reflects the current dominant logic in political marketing research. It describes political parties' use of sophisticated marketing tools to persuade the electorates to consider choosing their products (policy promises), which are sometimes customized to satisfy a particular segment of voters (Henneberg et al., 2009). This is similar to what Lees-Marshment (2001) described as market(ing) orientation.

Where the focus of the marketing efforts of parties is the voter – the needs and preferences are incorporated into the design of the parties' offerings (Henneberg, 2006). This orientation requires an effective blend of varied marketing techniques that respond to marketing insight gathered from the electorate through opinion polls and surveys (Henneberg et al., 2009; Johansen, 2005; Wring, 2005). The relational approach to political marketing or what Henneberg and O'Shaughnessy (2009) called 'political relationship marketing' is anchored on forming and maintaining long-term relationships with the electorates. Prior to the work of Henneberg and O'Shaughnessy (2009), there had been calls for the application of relationship marketing to politics (Bannon, 2005; Newman, 2002). The relational approach advocates for a ship away from one-off transactional exchange to a focus on lifetime value achieved through continued interactions, networking and co-creation of

policy promises (Johansen, 2005; Laczniak & Murphy, 2006). According to Ormrod (2020), an exchange of value in the political sphere is not a one-off event but a three-tier process. The exchange process starts with the candidate making promises to the electorates, which can only be redeemed if voted for and having leverage on the legislature (Henneberg & Ormrod, 2013; Ormrod, 2017, 2020).

All these three episodes of interactions are influenced by the activities of public affairs professionals such as lobbyists (Bitoni & Harris, 2017; Brown, 2016; De Bruycker, 2019). Henneberg et al. (2009, p.172) conclude that "relational political marketing management is based on a comprehensive and 'permanent' (i.e. continuously ongoing) portfolio of marketing activities, including policy development, communication, implementation, and long-term relationship and stakeholder management." They further pointed out that among the three marketing models discussed the relational political marketing approach appears more compatible with the concept of democracy. This is because political relationship marketing insists on the formation of relationships with voters and getting to know their needs and preferences instead of relying on polls and surveys (Henneberg & O'Shaughness, 2009; Johansen, 2005).

Political Relationship Marketing: Relationship marketing in the context of service, in which politics is part, is known to have been introduced first by Berry (1983), defined as attracting, maintaining and enhancing customer relationships. To Gronroos (1994), the marketing mix paradigm that underpins managerial marketing, and which has dominated marketing thought, practice and research in almost the last four decades is fast losing its position to the emerging relationship marketing paradigm. Similarly, political marketing which used to be "transaction-oriented" (O'Shaughnessy, 1990; O'Shaughnessy 2005) is giving way to the relational approach to political marketing (Elder & Lees-Marshment, 2019), which scholars believe would better explain the theory of political marketing (Scammell 1999; Bannon 2003; Dean & Croft 2001). It has been argued that the relational marketing approach or what Henneberg and O'Shaughnessy (2009) termed as political relationship marketing is the ideal of all the political marketing models that would suit the deliberative nature of democracy (Henneberg et al., 2009; Dean & Croft, 2001; Newman 1999; O'Shaughnessy, 1990).

It has also been noted in the political marketing literature that political relationship marketing could create the platform for useful dialogue between political actors (candidates and parties) the electorates (Bannon, 2005; Johansen, 2005; Henneberg & O'Shaughnessy 2009). Just as in commerce, political actors and the electorates believe that political exchanges should not be seen as a one-off exchange transaction (voting for a candidate in an election) but a continuous social engagement around which their lives evolve (Elder & Lees-Marshment, 2019; Sniderman et al., 1993). Besides, the opportunity to cultivate and nature long-term relationships based on trust and commitment (Morgan & Hunt 1994) would be an irresistible offer for politicians (Henneberg & O'Shaughnessy, 2009). Although the relationship marketing theory emerged in the early 80s, it was not until the early 2000s that researchers contemplated its application to politics (Henneberg & O'Shaughnessy, 2009). Scammell (1999) was emphatic when she claimed that there was barely any literature on political relationship marketing. Among the pioneering works on the relational approach to political marketing is that of Dean and Croft (2001) which adapted the six market model of Christopher et al. (1991) to arena politics.

While this study highlighted some of the intricacies associated with the political exchange process and the possibility of relationships, it failed to explain the essence of these relationships to politics (Henneberg & O'Shaughnessy, 2009). According to Bannon (2008) relational approach to political marketing though not new in marketing because its core principles are akin to direct marketing, its suitability and applicability in the sphere of politics remain an unchartered territory that requires further probe. Other scholars such as Henneberg and O'Shaughnessy (2009); Bannon (2003) have bemoaned the lack of interest in the relational approach to political marketing by scholars in the field, despite the potential positive impact political relationship marketing could have on political actors and democracy in general. For example, Henneberg and O'Shaughnessy (2009) posit that political relationship marketing could foster continuous interactivity between political actors and voters which would make voters active participants of the political exchange process instead of the current situation where they (voters) sometimes feel alienated. One of the shortfalls of the current approaches to political marketing is voter manipulation and lack of trust for the political class by voters.

This could be cured by the relational approach because the key underlying principles of relationship political marketing are trust and keeping promises which have proven to be daunting tasks for many politicians (Bannon, 2008; Henneberg & O'Shaughnessy, 2009). One key criticism of political relationship marketing is the lack of conceptual development. For instance, the dimensions and constructs that are needed to further explain the concept and also facilitate empirical studies are still lacking (Henneberg & O'Shaughnessy, 2009; Henneberg et al., 2009). To operationalize political relationship marketing, its conceptual development has to be extended beyond the "cosmetic and superficial" (Henneberg, et al., 2009, p.170) acts. Despite these shortfalls, a critical examination of the current practice of political marketing would reveal some traces of political relationship marketing. For example, the 2008 campaign of Barrack Obama adopted marketing strategies that did not entice electorates to their online platforms but sought to convert them to loyal supporters (Johansen, 2016). This validates the claim of Henneberg and O'Shaughnessy (2009) that political parties could benefit more if they were to integrate IT into political relationship marketing, as this would not only increase party membership but could foster participatory decision making.

3. Methodology

This is a qualitative study (Creswell, 2007) aimed at exploring how internal relationships are managed in the case constituencies of political parties in Ghana. This study is phenomenological in nature because it sought to explore respondents' "perceptions, feelings and lived experiences" (Guest, Namey and Macqueen, 2012, p.12) about internal party relationships. A combined data source of in-depth interviews of constituency executives and party constitution was used (Lilleker, 2003). Interviews were adopted because of their ability to provide insightful data that reflect participants' personal thoughts, feelings worldview (Guest, Namey, Taylor, Eley & McKenna, 2017). The two parties' activities in the constituencies are guided by their constitutions. In the two parties, there are no additional documents such as constituency meeting guide, training guide, outreach guide, etc that offer any "to do" framework besides the broad brush party constitution, which only offers policy level statements of what is expected. This was noted by the party executives interviewed, and our frantic search online also failed to return any such documents. For the in-depth interview a sample of 24 respondents (Creswell, 1998; Morse, 1994), comprising three party executives from each of the eight case constituencies were selected. In arriving at the sample, the party constituency population was categorized.

Into urban stronghold constituencies, sub-urban stronghold constituencies, urban orphan constituencies and sub-urban orphan constituencies. As an operational definition in this study, a constituency is considered a stronghold when it has been won three consecutive times by the same party in elections. This definition reflects that of the extant literature where a constituency is regarded as a stronghold of a particular party if the party has won all elections in a given period of time in the constituency (See Keefer & Khemani, 2009). This study defines an orphan constituency as one that has not been won by one party in three electoral cycles. The data collection for the study was done between January and March 2016. Data was collected through interviews with the help of an interview guide (Guest, Bunce & Johnson, 2006). The interview guide was semi-structured, this allowed for clarification to be sought when necessary. The interviews were conducted in English and later transcribed into text (McLellan, MacQueen, & Niedig 2003). The two authors each went through the transcribed text against the voice recordings to ensure accuracy (Guest et al., 2006). Thematic analysis technique was used to identify attributes for categorization (Guest, et al., 2012, Guest, et al., 2006). Thematic analysis is by far the most effective and popular analytical tool used in text-based data analysis because of its ability to flesh out the intricate details hidden in the data (Guest et al., 2012).

Table 1: Coding Framework

Relationship	
Categories	**Attributes**
	(1) Interactivity
	(2) Networking
	(3) Functional relationship
	(4) Internal message sale
	(5) Integrated communication

Organizational Culture	(6) Reduced conflict (7) Reduced crosscheck (8) Team work (9) Probity (10) Equity (11) Reliability (12) Relationship importance
Organizational Climate	(1) Cooperation (2) Leadership support (3) Trust (4) Fairness (5) Friendliness (6) Reduced conflict (7) Performance standard (8) Commitment

Source: Author's construct.

4. Findings and Discussion

As noted in the methodology above, in-depth interviews were conducted. These interviews were recorded on tape and later transcribed into text. After synthesizing and analyzing the data the following themes emerged; interactivity, networking, internal partnership, trust and commitment. These shall be explained in the sections that follow, under subheadings interactivity and networking, internal partnerships and trust and commitment.

Profile of Participants: The demographic profile of the participants as illustrated in table 2 indicates that the majority of the respondents were male precisely 83.33 percent and 16.67 percent were female. The ages of the participants ranged between 28 to 55 years with a mean age of 35.9 years. This is an indication that the youth is taking a special interest in politics at the grassroots level. In terms of education, the majority (66.67 %) of the participants were degree holders, 12.5 percent had education up to the postgraduate level and 20.83 percent were diploma holders. When an inquiry was made about participants' political experience it emerged that their experiences ranged between 5 to 20 years with a mean experience of 10.8 years.

Table 2: Sample Characteristics

	N= 24
Gender	
Male	20 (83.33%)
Female	4(16.67%)
Age	
Range	28 – 55 yrs
Mean	35.9
Education	
Diploma	5(20.83%)
Degree	16(66.67%)
Postgraduate	3(12.5%)
Political Experience	
Range	5 – 20 yrs
Mean	10.8

Source: Authors' construct.

Attributes of Political Relationship Marketing in Party Constituencies

Interactivity and Networking: Is there evidence of interactivity and networking in the case constituencies? From the data table above, attributes 1-3; interactivity, networking, functional relationship, were observed by

party executives as fundamental to their work. The attributes were also noted in the parties' constitutions. These attributes were measured by frequency of meetings, unhindered information flow amongst functional executives using varied forms of communication channels, as well the existence of inter-committee working groups. To these questions, the following are some of the responses: Sometimes we meet twice a month. We don't really have scheduled time for meetings but our party branches do hold weekly meetings to discuss party matters. We often make efforts to attend these meetings to interact with our officers and learn at first hand some of the concerns of the party officers and members at that level. We often communicate with the regional office, but let me add that most of the time it is the regional office that initiates our interaction with them. Besides meetings, we also do communicate through telephone, fax and sometimes email, we do communicate through social media, particularly using the WhatsApp platform to share information and discuss party matters.

Yes, we work together the research officer works closely with the communications officers. The use of technology seems to enhance the level of interactivity and networking, ensuring that party discussions are not limited to physical meeting days only. Executives in the case constituencies note the increasing use of social media platforms and other ICT channels such as WhatsApp, Facebook and Emails as platforms that greatly facilitate their meetings. This finding reinforces the assertion of Henneberg and O'Shaughnessy (2009) that political relationship marketing would be better enhanced if it is integrated with IT. These platforms are not only used within group members but also cross-functional areas: oh yes, we communicate through WhatsApp often; for example, we have groups like constituency secretaries group platforms, chairmen platform, organizers group platform, and so on. At the regional level too there are such group platforms that are mainly used to disseminate information. Analyses of the two-party constitutions also show evidence of the three attributes. For example, article 6, section 1 of the NPP constitution provides that each constituency shall have a constituency executive committee, which shall consist of all the functional areas including: finance, organization, research, communication, and the coordinators of the various demographic groups.

It demands, in section 8 that the constituency executive committee: shall meet at least once every, month and shall present quarterly reports on the operations and activities of the party in the constituency to the regional executive committee. Whereas a similar arrangement of interactivity and networking amongst party functionaries is observed in the NDC constitution, the constitution is however silent on the frequency of such interactions. For example, article 11 of the constitution observed that the party is also organized at the branch, and article 13 highlights the mandate of the branch meetings. Article 14 and 24 demand that party branch executives must reflect all functional areas including finance, organization, research communication and all coordinators of various interests' groups. The dialogical, interactive and functional relationship to internal constituency management, as observed in the quotes above, especially in the case of NPP characterize the relational approach to political marketing, as noted in the literature on political relationship marketing (Banon, 2008; Henneberg, et al., 2009; Henneberg & O'Shaughnessy, 2009). This means the case constituencies have relational characteristics. However, it could also be argued that these attributes are characteristic of political organizations given their nature, and so do not immediately suggest that the constituencies are relationship-oriented.

Internal Partnership: Another relational attribute gleaned for data was internal partnerships. Literature (Christopher et al., 1991; Gummesson, 1991) suggests that in organizations where there are internal partnerships functionaries see each other as customers, assess their needs and sell to them using an integrated communication approach. The internal partnership also means that functionaries work together in a way that could reduce needless crosschecking, and reduce conflict situations as well as empowerment of frontline staff. In a question, are you allowed to take decisions on party matters without reference to your superiors? The following answers were typical of almost all the eight case constituencies: our work involves going into the hinterlands, places where you cannot even have access to telephone services or the internet. If you are confronted with a problem in such an environment you can only act on your own because you can't defer the issue and you are also out of coverage area. You have to deal with the issue and then later brief your colleagues and superiors. Our work requires us to deal with issues on the spot without having the benefit of consultation. For example, you go to the remote villages to interact with the party members and you are presented with a problem, you have no choice but to try and resolve it there and then.

In the case of constituencies these attributes, though evident in the parties, are seeds of conflict as opposed to reducing conflict. This is because respondents have noted that constituency party executives are not given training, and there is no 'standard operational procedure (SOP)' based on which their activities are guided. It is also noted that educational qualification is not needed in most of the contests for party executive positions. So not crosschecking with other leadership could present a situation of 'organizational discord,' with the potential of increasing conflict situations on party position to issues since individuals are, by default, expected to act based on their volitions, judgment, and inherent knowhow. In addition, when party respondents were asked how conflicts arise in the daily management of the constituency, the majority referred to party primaries as a major source: Unfortunately, in recent years our disagreements have escalated and we wash our dirty linen in public because of perceived factionalism. During our party primaries, for instance, you find executives supporting one candidate over the other and because of these preferences we throw mud at each other forgetting that we are members of the same family. Some of these conflicts and tensions are sometimes due to personal grudges between party officers and/or members.

Mostly these conflicts arise during our primaries. From the interview transcripts, there was no evidence of party functionaries seeing themselves as customers to appeal to or be persuaded by in case of dissent or disagreements on party positions. Divergent views to party hierarchy positions are considered insubordination, which could merit disciplinary action. A similar situation is evident in the constitutions of the two parties, where failure to uphold publicly party policies is considered misconduct (NPP constitution, Article 4 section 7; NDC constitution article 39 and 40). From the constitutions of the two parties, attempts to reduce conflict situations were also through party disciplinary process, where they specify punitive measures for members who do not follow party rules and regulations (NPP constitution, Article 4 section 7; NDC constitution article 39 and 40). The inter-functional approach to committee formation is another step to encourage teamwork; reduce conflicts and ensure crosschecking is limited to the minimum.

Trust and Commitment: Trust and commitment were yet another theme that emerged after synthesizing the data. This finding resonates with views expressed in the political marketing literature which suggest that the key underlying principles of the relational approach to political marketing are trust and keeping promises (Bannon, 2008; Dean & Croft, 2001; Henneberg & O'Shaughnessy, 2009;). According to the relationship marketing text, trust and commitment form part of the underpinnings of relationship-oriented organizations. As discussed in the review of the literature, both trust and commitment are input and output variables. That is, a relationship may begin based on trust and commitment to the terms of the relationship. At the same time, a relationship may begin with individuals doubting their commitments. In the case of constituencies, the party executives did not find these ingredients in internal party relationships. For example, when respondents were asked about the kind of conflict situation.

They experienced in the daily running of the constituency, majority referred to lack of transparency in reward systems, factionalism and suspicions amongst executives: some time ago this party used to be strongly united but now because of this perceived action in our party, there are a lot of suspicions and tensions. We have allowed a few people's interests to tear the party apart. This person says I belong to this camp and another says I belong to this camp. This kind of division is causing our downfall. The only reward we often receive for solving party issues on our own is verbal praise, meanwhile, sometimes we have to use our own resources to solve these problems. Oh, such opportunities (personal development) exist, but you see we at the lower level here hardly benefit from this policy; it is only those at the national office who enjoy these opportunities. They can go for further studies paid for by the party and some officers to get the opportunity to attend refresher courses often organized by NGOs.

Theoretical and Practical Implication: The findings of the study in our view make a modest yet significant contribution to the conceptualization of political relationship marketing. First, the concept of relationship marketing has been developed in the field of commerce but the same cannot be said about its application in politics particularly in the African context. In addition, the current literature on political relationship marketing is dominated by conceptual papers with very limited empirical studies hence studies like this one bring different perspectives to the development of the theory specifically in the area of construct development. Furthermore, this study provides useful lessons for political actors (parties and candidates) as the findings reveal a deep-seated mistrust among party officers and members. Political parties and candidates

could find these findings useful in their quest to adopt political relationship marketing, as trust and keeping of promises are at the heart of the theory (Bannon, 2008; Dean, & Croft, 2001; Henneberg & O'Shaughnessy, 2009).

5. Conclusion and Recommendations

This study sought to explore the practice of political relationship marketing in political parties at the local level. After analyzing the data, it emerged that some form of political relationship marketing is being practiced. Evidently, the most prevailing attributes of political relationship marketing in the eight case constituencies are interactivity and networking. These attributes are fully practiced and are widely sanctioned in the constitutions of the case parties. Beyond that, the two political parties show a profound deficit in internal partnership and trust and commitment attributes to the extent that the majority of their activities are seeds for conflicts. For example, party executives are aware of personal development opportunities but note that they only exist at party headquarters. Currently, there is a lack of a clear strategic plan by the parties on the implementation of relationship marketing. It is recommended that political parties should design deliberate strategies to promote trust and partnership which are vital to internal relationship management.

Limitations and Suggestions Future Research: Characteristic of any research work, this study has some limitations which need to be noted when interpreting the findings. First, the use of a semi-structured interview guide did not quite allow for open discussion of issues by participants or perhaps they were just being cautious. Questions that were expected to elicit open-ended responses got very brief answers. It will therefore be a useful academic exercise to further explore the subject matter by using different qualitative data collection approaches such as focus group discussion. Furthermore, the themes that emerged from the findings could be developed into constructs to measure political relationship marketing in a quantitative study.

References

Bagozzi, R. P. (1975). Marketing as exchange. *Journal of Marketing*, 4(39), 32-39.

Baines, P. R. & Egan, J. (2001). Marketing and political campaigning: mutually exclusive or exclusively mutual? *Qualitative Market Research: An International Journal*, 4(1), 25-34.

Bannon, D. P. (2005). Relationship marketing and the political process. Political Marketing Conference, Middlesex University.

Bannon, D. P. (September 2003). Relationship marketing and the political process Paper presented at the Political Marketing Conference, London.

Bennet, R. (1992). The customer-driven competitive edge. *Bank Marketing,* 24(5), 50-52.

Berry, L. L. (1983). Relationship marketing in Berry, L. L., Shostack, G. L. and Upah, G. D. (Eds), Emerging Perspectives on Services Marketing (pp.25-28). American Marketing Association.

Bitoni, A. & Harris, P. (2017). Lobbying in Europe: Public affairs and the lobbying industry in 28 EU countries. Palgrave MacMillan.

Blomqvist, R., Dahl, J. & Haeger, T. (1993). Relations marknadsforing: Strategic method for service kon kurren (relationship marketing: strategy and methods for service competition). IHM Forlag, Goteborg.

Bowler, S. & Farrell, D. M. eds. (1992). Electoral strategies and political marketing. Macmillan Press.

Brown, R. (2016). Firm-level political capabilities and subsequent financial performance. *Journal of Public Affairs,* 16, 303–313.

Brown, M. B. & K. Coates. (1996). The Blair revelation: Deliverance for whom? Spokesman.

Cappella, J. N. & Jamieson, K. (1997). Spiral of cynicism. The press and the public good. Oxford University Press.

Christopher, M. G., Payne, A. F. T. & Ballantyne, D. (1991). Relationship marketing. Heinemann.

Creswell, J. W. (2007). Qualitative inquiry and research design: Choosing among five approaches, (2nd ed.). Sage.

Creswell, J. (1998). Qualitative inquiry and research design: Choosing among five traditions. Sage.

Dean, D. & Croft, R. (2001). Friends and relations: long-term approaches to political campaigning. *European Journal of Marketing*, 35(11/12), 1197-1217.

Dermody, J. & Scullion, R. (2003). Exploring the consequences of negative advertising in liberal democracy. *Journal of Political Marketing,* 1(2), 77-100.

De Bruycker, I. (2019). Lobbying: An art and a science – five golden rules for an evidence-based lobbying strategy. *Journal of Public Affairs*, 19, 1-4. https://doi.org/10.1002/pa.1949

Elder, E. & Lees-Marshment, J. (2019). Relational political marketing communication. In Political Marketing (pp. 183-210). Routledge.

Franklin, B. (1995). Packaging Politics. Arnold.

Franklin, B. (1997). Newzak and News Media. Arnold.

Grönroos, C. (2004). The relationship marketing process: communication, interaction, dialogue, value. *Journal of Business & Industrial Marketing*, 1(2), 99-113. doi.org/10.1108/08858620410523981

Grönroos, C. (1996). Relationship marketing: Strategic and tactical implications. *Management Decision*, 34(3), 5-14. doi.org/10.1108/00251749610113613

Gronroos, C. (1994). From marketing mix to relationship marketing: towards a paradigm shift in marketing. *Management Decisions*, 32(2), 4-20. doi.org/10.1016/S1320-1646 (94)70275-6

Guest, G., Namey, E., Taylor, J., Eley, N. & McKenna, K. (2017). Comparing focus groups and individual interviews: findings from a randomized study. *International Journal of Social Research Methodology,* 20(6), 693-708. DOI: 10.1080/13645579.2017.1281601

Guest, G., MacQueen, K. M. & Namey, E. E. (2012). Introduction to applied thematic analysis. *Applied thematic analysis*, 3(20).

Guest, G., Bunce, A. & Johnson, L. (2006). How many interviews are enough? An experiment with data saturation and variability. *Field methods*, 18(1), 59-82.

Gummesson, E. (1991). Marketing-orientation revisited: The crucial role of the part-time marketer. *European Journal of Marketing*, 25(2), 60-75. doi.org/10.1108/03090569110139166

Gummesson, E. (1987). The new marketing—developing long-term interactive relationships. *Long Range Planning*, 20(4), 10-20. doi.org/10.1016/0024-6301 (87)90151-8

Harker, M. J. (1999). Relationship Marketing Defined? An examination of current relationship marketing definitions. *Marketing Intelligence and Planning*, 17 (1), 13-20. doi.org/10.1108/02634509910253768

Harrop, M. (1990). Political marketing. *Parliamentary Affairs,* (43), 277-91.

Hastings, G. (2003). Relational paradigms in social marketing. *Journal of Macro-marketing,* 23(1), 6-15. doi.org/10.1177/0276146703023001006

Henneberg, S. C. & Ormrod, R. (2013). The triadic interaction model of political marketing exchange. *Marketing Theory,* 13, 87–103. https://doi.org/10.1177/1470593112467269

Henneberg, S. C. & O'Shaughnessy, N. J. (2009). Political relationship marketing: Some macro/micro thoughts. *Journal of Marketing Management*, 25(1-2), 5-29.

Henneberg, S. C., Scammell, M. & O'Shaughnessy, N. J. (2009). Political marketing management and theories of democracy. *Marketing Theory*, 9(2), 165-188.

Henneberg, S. C. (2008). An epistemological perspective on research in political marketing. *Journal of political marketing*, 7(2), 151-182.

Henneberg, S. C. (2006). Leading or following? A theoretical analysis of political marketing postures. *Journal of Political Marketing*, 5(3), 29-46.

Henneberg, S. C. (2004). The Views of an Advocatus Dei: Political Marketing and its Critics." *Journal of Public Affairs,* 4(3), 225-243. doi.org/10.1002/pa.187

Henneberg, S. C. (2002). Understanding political marketing. The idea of political marketing, 93-170.

Henneberg, S. C. M. (1997). Voting behavior as a special case of consumer behavior. Judge Institute of Management Studies, University of Cambridge.

Hinson, R. & Tweneboah-Koduah, E. Y. (2010). Political marketing strategies in Africa: expert opinions of recent political elections in Ghana. *Journal of African Business*, 11(2), 201-218. doi.org/10.1080/15228916.2010.508999

Hughes, A. & Dann, S. (2012). Political marketing redefined: Exploring the consequences of stakeholders on the marketing mix and political consumption. ACR Asia-Pacific Advances.

Johansen, H. P. (2012, 2016). Relational political marketing in party-centered democracies: Because we deserve it. Routledge.

Johansen, H. P. M. (2005). Political marketing: more than persuasive techniques, an organizational perspective. *Journal of Political Marketing,* 4(4), 85–105.

Kavanagh, D. (1995). Election Campaigning: The New Marketing of Politics. Blackwell.

Keefer, P. & Khemani, S. (2009). When do legislators pass on pork? The role of political parties in determining legislator effort. *American Political Science Review*, 103(1), 99-112. https://doi.org/10.1017/S0003055409090054

Kotler, P. & Keller, K. L. (2012). Marketing management, 14th Edition. Prentice-Hall, One-Lake Street.

Kotler, P. & Zaltman, G. (1971). Social marketing: An approach to planned social change. *Journal of Marketing*, 35(3), 3-12.

Kotler, P. & Levy, S. J**.** (1969). Broadening the concept of marketing, *Journal of Marketing*, 3(33), 10-15.

Laczniak, G. R. & Murphy, P. E. (2006). Normative perspectives for ethical and socially responsible marketing. *Journal of Macro marketing*, 26(2), 154-177.

Lees-Marshment, J. (2019). Marketing scholars and political marketing: the pragmatic and principled reasons for why marketing academics should research the use of marketing in the Political Arena. *Customer Needs and Solutions*, 6(3-4), 41-48.

Lees-Marshment, J. S. (2009). Marketing after the election: The potential and limitations of maintaining a market orientation in government. *Canadian Journal of Communication*, 34(2), 205-227.

Lees-Marshment, J. (2004). Mis-marketing the conservatives: The limitations of style over substance. *Political Quarterly,* 75(4), 392–397. doi.org/10.1111/j.1467-923X.2004.00641.x

Lees-Marshment, J. (2001). Political marketing and British political parties. Manchester University Press.

Lilleker, D. & Jackson, N. (2013). Political campaigning, elections and the Internet: Comparing the US, UK, France and Germany. Routledge.

Lilleker, D. G. (2005). The cause of an emerging democratic deficit in Britain? *Journal of Nonprofit & Public Sector Marketing,* 14(1/2), 5–26.

Lilleker, D. G. (2003). Interviewing the political elite: Navigating a potential minefield. *Politics*, 23(3), 207-214.

Lock, A. & Harris, P. (1996). Political marketing-vive la difference! *European Journal of Marketing*, 30(10/11), 14-24. doi.org/10.1108/03090569610149764

Mauser, G. A. (1983). Political marketing: An approach to campaign strategy. Praeger.

McLellan, E., MacQueen, K. M. & Niedig, J. (2003). Beyond the qualitative interview: Data preparation and transcription. *Field Methods,* 15(1), 63–84.

Mensah, K. (2009). Symbolically speaking: The use of semiotics in marketing politics in Ghana. *Identity, Culture and Politics: An Afro-Asian Dialogue,* 10(1), 75-89.

Mensah, K. (2017). Political marketing and management: A new architecture. In Political Marketing and Management in Ghana (pp. 1-16). Palgrave Macmillan, Cham.

Moloney, K. & Colmer, R. (2001). Does political PR enhance or trivialize democracy? *Journal of Marketing Management,* 17, 957–68.

Morgan, R. M. & Hunt, S. D. (1994). The commitment- trust theory of relationship marketing. *Journal of Marketing,* 58(3), 20-38. DOI: 10.2307/1252308

Morse, J. (1994). Designing funded qualitative research. In N. Denzin and Y. Lincoln (1994) Handbook for qualitative research, (ed., pp.220–35). Sage.

Moufahim, M. & Lim, M. (2009). Towards a critical political marketing agenda? *Journal of Marketing Management*, 25(7-8), 763-776. doi.org/10.1362/026725709X471613

Newman, B. (2002). The role of marketing in politics. *Journal of Political Marketing,* 1(1), 1-5.

Newman, B. I. (1999). The Mass Marketing of Politics. Sage.

Newman, B. (1994). The Marketing of the President. Political Marketing as Campaign Strategy. Sage.

Nickerson, D. W. & Rogers, T. (2014). Political campaigns and big data. *Journal of Economic Perspectives*, 28(2), 51-74. DOI: 10.1257/jep.28.2.51

Ormrod, R. P. (2020). Political exchanges of value and the stakeholder concept: Implications for public affairs. Journal of Public Affairs, e2084.

Ormrod, R. P. (2017). Stakeholders in the political marketing context. *Journal of Public Affairs,* 17, e1671. https://doi.org/10.1002/pa.1671

O'Shaughnessy, N. J. (2005). Politics and propaganda: Weapons of mass seduction. University of Manchester Press.

O'Shaughnessy, N. (2001). The marketing of political marketing. *European Journal of Marketing,* 35(9/10), 1047-57.

O'Shaughnessy, N. (1996). Social propaganda and social marketing: A critical difference? *European Journal of Marketing*, 30(10/11), 54-67. doi.org/10.1108/03090569610149791

O'Shaughnessy, N. J. (1990). The phenomenon of political marketing. Springer.

O'Shaughnessy, N. & Henneberg, S. (2002). The idea of political marketing (Eds.), Praeger.

Reeves, P. (15th-17th September 2009). Political parties and political marketing 'strategies'. Paper Submitted to British Academy of Management Conference 2009, Brighton UK.

Savigny, H. (2006). Political marketing and the 2005 election: what's ideology got to do with it? D. G. Lilleker, N. A. Jackson and Scullion, R. (2006). The marketing of political parties. Manchester University Press.

Scammell, M. (1999). Political marketing: lessons for political science. *Political Studies,* 47(4), 718-739. doi.org/10.1111/1467-9248.00228

Scammell, M. (1995). Designer Politics: How elections are won. Palgrave Macmillan UK.

Sniderman, P. M., Brody, R. A. & Tetlock, P. E. (1993). Reasoning and Choice: Explorations in Political Psychology, Cambridge University Press.

Swanson, D. (1997). The political-media complex at 50. *American Behavioural Scientist,* 40(8), 1264-82.

Tweneboah-Koduah, Y. E., Akotia, M., Akotia, C. S. & Hinson, R. (2010). Political party brand and consumer choice in Ghana. *Journal of Management Policy and Practice*, 11(5), 79-88.

Webster, Jr, F. E. (1992). The Changing Role of Marketing in the Corporations. *Journal of Marketing,* 56(4), 1-17. DOI: 10.2307/1251983

Wring, D. (1997). Reconciling marketing with political science: theories of political marketing. *Journal of Marketing Management,* 13, 651-66.

Information Management and Business Review (IMBR)
Vol. 13, No. 3, September 2021 (ISSN 2220-3796)

The Impact of the Ongoing Pandemic on Digital Finance Transactions: An Empirical analysis

Khushbu Agarwal, Nidhi Nalwaya
Pacific Institute of Management, Faculty of Management, Pacific University, Udaipur, India
Faculty of Commerce, Parul University, Vadodara, India
khushbu.agarwal6@gmail.com

Abstract: The ongoing pandemic has resulted in a disruption of the life of all citizens and impacted all the spheres, more so the financial system because the Pandemic and its aftermath has shut all economic activity except those which as per the government directives are considered the most essential. This has deeply impacted private consumption, external trade as well as investment in the economy. Accordingly, both in retail stores and e-commerce orders, a common strand is that many of the consumers are now paying bills via digital payment mechanisms and taking contactless delivery of goods wherever possible. "Digital financial transaction systems, e-wallets and apps, online transactions using e-banking, usage of Plastic money (Debit and Credit Cards), etc. have recorded a substantial increase in demand during the crisis". The objective of the present paper is to examine and analyze the digital finance transactions in selected cities during the ongoing pandemic.

Keywords: *Pandemic, Digital payments platforms, Cashless Economy, Digital Finance Services.*

1. Introduction

The recent ongoing lethal pandemic and its uncertain aftermath have meant that "most factories, markets, shops and places of worship were closed and are now partially operational, most public transports were suspended and construction work has been put on a pause, as most people stay home and practice social distancing". The pandemic and its subsequent aftermath and partial opening have impacted many sectors including Apparel and textiles, Auto and Auto Components, Aviation, Building and Construction, Petrochem and Chemicals, Financial Services, Education, MSME, Transport and Logistics et al. The Pandemic has led to, stay at home, work from home and social distancing protocols thus making the financial transactions ecosystem prone to a lot of hurdles in the given context, when consumers are wary to venture out of their homes- it has been the digital payment platforms and other internet-based services that have given respite to the consumers.

Exposition of Digital Finance Transactions - Internet Banking and Apps: Most Financial services providers in the country offer a "wide range of services and their products through Digital platforms (internet).

- **Online Fund Transfer:** Transfer funds between accounts, even if they are in different branches or cities. Customers can also transfer funds to any person having an account with the same bank anytime, anywhere, using third party funds transfer option.
- **Bill Payment Service:** Banks Bill Payment is the easiest way to manage bills. An account holder can pay their regular monthly bills i.e. telephone, electricity, mobile phone, insurance, etc. at any time, anywhere for free.
- **Trading Account:** Demat is a commonly used abbreviation of Dematerialization, which is a process whereby securities like shares, debentures are converted from the material (paper documents) into electronic data and stored in the computer of an electronic Depository.
- **Debit Card & Credit Card: Debit cards** allow bank customers to spend money that they have by drawing on funds that they deposited with the card provider. **Credit cards** allow consumers to borrow money from the card issuer up to a certain limit to purchase items or withdraw cash.
- **Mobile Banking:** Mobile banking is a service provided by a bank or other financial institution that allows its customers to conduct financial transactions remotely using a mobile device such as a mobile phone or tablet. It uses software, usually called an app, provided by the financial institution for the purpose".

2. Review of Literature

Board (2021) mentioned that compared to developed nations, quite less number of Indian female is availing banking services independently which can be due to lack of awareness or dependency. According to Meghani (2017), internet banking is an improvement over PC banking and it is done over a highly accessible public network. It is accessible to anyone using the Internet not just the bank's customers". Mihir & Chavda (2014) pointed out that internet banking adoption become popular in the year 2000 and started peaking up from the year 2012 onwards"**.** Umrez (2016) described that most customers who have adopted internet banking services believe that it has got a lot of advantages while on the other side some believe that because of security and privacy issues innovative banking has disadvantages". Chavan (2013) discusses some challenges in an emerging economy. Paper concluded that one of the benefits that banks experience when using e-banking is increased customer satisfaction. The purpose of the study of Pekka (2008) is to further the understanding of innovation resistance by dividing internet banking non-adopters into three groups based on their intentions to use the innovation. Thereafter, the aim is to identify how the resistance differs in these customer groups".

Significance of Study: A survey by KPMG "Potential impact on Covid-19 on the Indian Economy emphasizes that this crisis will give a real push to Digital and will have extensive as well as intensive implications for moving fast forward towards a physical model (Brick and mortar and Digital), the impact will be on the way companies do business and employees work – the B2B, B2C, B2G services, e-commerce, e-governance, etc. Digital financial companies have also risen to the challenge, setting up shops in more expedient places to allow people to sign up and use their money as they wish. Paytm, Mobikwik, BHIM UPI, Amazon pay, etc have seen a huge surge in transactions. According to a report by Statista, in the context of digital platforms usage for financial transactions during Covid -19 more than 33 percent said they used digital payments more than before, while nine percent made online payments exclusively. This brings to for the issue of financial inclusion which is crucial as well as critical people who have access to cards and operational bank accounts are much better prepared for a crisis like a Pandemic through Direct Benefit Transfers etc than those marginalized people whose money is all in cash, primarily in the form of the currency".

3. Research methodology:

Statement of the Problem: The present paper is undertaken to analyze the impact of the Pandemic on Digital Finance transactions in selected cities of Vadodara, Indore and Jodhpur.

Objectives of the Study: Digital Banking offers a set of benefits as well as challenges to both its customers and organizations. The study has been undertaken to determine:

- To study the frequency of bank branch visits before and during the pandemic.
- To analyze the level of knowledge regarding Internet Banking facilities among respondents.
- To study the impact of the pandemic on the usage of Digital Finance services by analyzing the frequency of the usage of different digital financial services before and during the pandemic.

Data collection:
Primary as well as secondary data is referred for the study. Primary data was collected with the help of a questionnaire and secondary data was collected from various sources such as journals, books, websites, reports, etc.

Sampling:
A sample of 360 customers was drawn by using the convenience sampling technique. The questionnaire was mailed to all the respondents and 246 filled questionnaires were received, the response rate was 68.3 percent.

Sampling Technique: convenience sampling technique

Sample size: 246 customers of three major cities i.e. Indore, Vadodara & Jodhpur.

Hypothesis testing:
The Chi-Square test of independence is employed to analyze the collected data to determine whether the frequency of using digital banking services is independent or dependent on the Pandemic.

Limitations of the Study: The study was conducted under certain limitations such as, that the sample has been taken from three selected cities in India and the respondents have been selected through convenience sampling. The data has been collected through a structured online questionnaire; it may restrict the opinion of the customers.

Data Analysis

The survey has been conducted in three major cities. A Questionnaire was used as the research instrument, which contained 2 sections: Demographic profile of customers and frequency of using major aspects of Digital finance transactions (internet banking).

Demographics	Range	No. of Respondents	%
Age	18-25	179	72.76
	26-35	39	15.85
	36-45	18	7.32
	>45	10	4.07
Gender	Male	162	65.85
	Female	84	34.15
Education	SSC	8	3.25
	HSC	8	3.25
	Graduate	30	12.20
	PG	193	78.46
	Ph D	7	2.85
Occupation	Business	29	34.96
	Service	86	19.11
	Professional	47	0.41
	Housewife	1	33.74
	Student	83	
Income	5000-15000	103	41.87
	15001-25000	57	23.17
	25001-35000	37	15.04
	35001 or above	49	19.92
City	Vadodara	72	29.27
	Indore	108	43.90
	Jodhpur	66	26.83

Five Points Multiple Choice Grid has been Used Ranging

Daily	Weekly	Monthly	Yearly	Never

A sample of 360 customers was drawn by using the convenience sampling technique. The questionnaire was mailed to all the respondents and 246 filled questionnaires were received, the response rate was 68.3 percent. Chi-Square test of independence is employed to analyze the collected data to determine whether the frequency of using digital banking services is independent or dependent of the Pandemic with using the following equation.

Table 1: Data Analysis

Questions	Options	No. of Respondents	%
Q1) Do you have your bank account?	Yes	246	100.00
	No	0	0.00
Q2) Before the pandemic, how frequently were you visiting your bank branch per month?	1 to 4 times	170	69.11
	5 to 8 times	28	11.38
	9 to 12 times	8	3.25
	More than 12 times	5	2.03
	Never	35	14.23
Q3) During the pandemic, how frequently do you visit your bank branch per month?	1 to 4 times	47	19.11
	5 to 8 times	46	18.70
	9 to 12 times	12	4.88
	More than 12 times	10	4.07
	Never	131	53.25
Q4) How much knowledge do you have about Internet/Online Banking Services?	Partial Information	54	21.95
	Just known	19	7.72
	Unknown	1	0.41
	Well known	172	69.92
Q4) Are you associated with Internet Banking Services provided by your bank?	Yes	211	85.77
	No	35	14.23

Which Internet Banking Services you were Using Before/During the Pandemic?

Statements	Situation	Daily	Weekly	Monthly	Yearly	Never
Payment of bills/fees/taxes	Pre Pandemic	23	30	97	23	38
	During Pandemic	33	62	78	11	27
Balance inquiry	Pre Pandemic	25	74	65	11	36
	During Pandemic	50	85	48	4	24
Fund transfers/ RTGS/ NEFT	Pre Pandemic	15	34	78	21	63
	During Pandemic	40	50	63	15	43
E-wallets and apps	Pre Pandemic	25	65	36	15	70
	During Pandemic	50	72	30	10	49
Debit card (ATM)	Pre Pandemic	46	89	45	10	21
	During Pandemic	68	98	35	6	4
Credit card (ATM)	Pre Pandemic	15	30	40	10	116
	During Pandemic	32	45	24	7	103
Retrieving bank statements	Pre Pandemic	11	36	66	32	66
	During Pandemic	29	51	49	22	60
Email/text alerts	Pre Pandemic	59	50	43	21	38
	During Pandemic	82	64	33	11	21
Trading /Demat Account	Pre Pandemic	21	23	36	16	115
	During Pandemic	43	36	26	10	96

If no, then how do you prefer to adopt Internet/Online Banking Services?

	Within a month	Within a year	May be in future	Never	Can't say
Pre Pandemic	22	7	3	3	211
During Pandemic	12	15	7	1	211

Formulation of Hypotheses:

H1: Frequency of online payment of bills/fees/taxes is not independent of Pandemic.
H2: Frequency of online balance inquiry is not independent of the pandemic.
H3: Frequency of online fund transfers/ RTGS/ NEFT is not independent of the pandemic.
H4: Frequency of using E-wallets and apps is not independent of the pandemic.
H5: Frequency of using a Debit card (ATM) is not independent of the pandemic.
H6: Frequency of using Credit Card is not independent of the pandemic.
H7: Frequency of Retrieving bank statements is not independent of the pandemic.
H8: Frequency of using Email/text alerts is not independent of the pandemic.
H9: Frequency of Trading /Demat Account is not independent of the pandemic".

Table 2: Application of Chi-Square Test

Criteria	Chi-Square Calculated Value	Chi-Square Critical Value	Decision
Online payment of bills/fees/taxes	21.08	13.28	H1 is accepted
Online balance inquiry	17.32	13.28	H2 is accepted
Online fund transfers/ RTGS/ NEFT	20.78	13.28	H3 is accepted
E-wallets and apps	13.94	13.28	H4 is accepted
Debit card (ATM)	18.49	13.28	H5 is accepted
Credit Card	14.45	13.28	H6 is accepted
Retrieving bank statements	15.34	13.28	H7 is accepted
Email/text alerts	14.81	13.28	H8 is accepted
Trading /Demat Account	15.14	13.28	H9 is accepted

4. Findings

- There is a decrease in the number of visits to the bank branch during the ongoing pandemic.
- Out of 246 respondents, 70% are well knowledgeable about internet banking services, whereby, 22% of respondents have partial knowledge for the same.
- Out of 246 respondents, 211 are associated with any of the internet banking facilities, whereby 35 respondents are still not associated with any online banking services.
- In the end by applying the chi-square test of independence, we found that "there is an increase in the usage of internet banking services after the pandemic. That means that usage frequency of online banking services is significantly associated with the pandemic situation".

5. Conclusion and Recommenddations

The results can be interpreted that there is an impact seen on the frequency of using different internet banking services as the result of the ongoing pandemic. Most of the respondents had working knowledge about Digital finance transactions/online banking services, whereas some respondents still only have partial knowledge about the same. Some respondents who are not associated with any of the online banking facilities also have a positive view to get associated with the same within a shorter period of time. Internet banking services are providing more benefits than traditional banking channels. As the customers have knowledge about the internet and they are keen to adopt internet banking in the future, it is the responsibility of the

bankers to create awareness about Digital Finance Transactions/ internet banking and to provide some training to the customers to encourage them to adopt and adapt.

The study concludes that pandemic attacks and the resultant lockdown have a significant impact on digital transactions and it is observed that usage of digital banking services is greatly affected due to the pandemic lockdown.

Future implications of the study

The COVID-19 event may yet test the resilience of the global financial system. Economic forecasts have been revised upwards, and buoyant asset valuations could be tested by a further rise in government bond yields. At the same time, uncertainty remains high against the backdrop of uneven vaccination progress and the continuation of containment measures. Identifying systemic vulnerabilities early on remains a priority. . Preserving financial stability is a necessary precondition for ensuring the smooth flow of finance to the real economy.

COVID-19 has reinforced the need to promote resilience amidst a rapid technological change in the economy and global financial system. The rapid use and adaptation of new technology have helped firms to operate effectively in the new environment. At the same time, they have put the spotlight on the need to ensure operational resilience in an environment of greater reliance on outsourcing and third-party service providers, including on a cross-border basis. More generally, the boost that COVID-19 seems to have given to digital financial services, in particular, various forms of digital payments reinforces the need to ensure that regulatory frameworks and approaches provide a solid basis for harnessing the benefits of such innovation while containing their risks.

References

Board, F. S. (2021). *Lessons Learnt from the COVID-19 Pandemic from a Financial Stability Perspective.* Financial Stability Board.

Chavan, J. (2013). INTERNET BANKING- BENEFITS AND CHALLENGES IN AN EMERGING ECONOMY. *IMPACT: International Journal of Research in Business Management*, 19-26.

http://www.jrfinancial.in/blog/impact-Pandemic-rs-500-rs-1000-note-various-sectors-economy/

http://qz.com/843872/indias-rupee-Pandemic-could-spark-a-new-digital-economy-in-the-cash-reliant-country/ (Yogesh K Dwivedi, Swansea University; Kuttimani Tamilmani, Swansea University, and Nripendra Rana, Swansea University)

https://theconversation.com/modis-bank-note-ban-has-inflicted-pointless-suffering-on-indias-poorest-69157

http://www.business-standard.com/article/finance/7-account-holders-in-india-use-net-banking-study-111072000193_1.html

Mihir B. & Chavda, D. A. (2014). Innovative banking products: Win-Win situation forCustomers and Banks. *International Journal of Commerce, Business and Management (ICBM)*, 824-829.

Meghani, D. A. (2017). The Impact of Demonetization on the frequency of using Internet Banking Services with reference to selected cities of Gujarat. *Pacific Business Review*, 64-72.

Pekka, L, S. S. (2008). Consumer resistance to Internet banking: Postponers, opponents and rejectors. *International Journal of Bank Marketing*, 440-455.

Umrez, M. R. (2016). Customer Resistance towards Internet Banking Among the Literates: An Empirical Study with Reference To Rayalaseema Region. *Imperial Journal of Interdisciplinary Research*.

Information Management and Business Review (IMBR)
Vol. 13, No. 3, September 2021 (ISSN 2220-3796)

Factors Influencing the Adoption of E-Health Management among Saudi Citizens with Moderating Role of E-Health Literacy

Waleed Mansi G Alshammari[1], Fahad Maiyah M Alshammari[2] & Faiz Mayah M Alshammry[3]
[1,3]King Khalid Hospital, Ha'il, Saudi Arabia
[2]Universiti Teknologi Malaysia (UTM), Malaysia
awaleedmansi2021@gmail.com, maiyah@graduate.utm.my, faizmayahmalshammry2021@gmail.com

Abstract: This study aimed to examine the role of internet access, social influence, facility access, and cost concerns on E-health adoption in Saudi Arabia with moderating role of E-health literacy. Saudi citizens were the targeted population of this study. To fulfill the objectives of this study, quantitative research methods with a cross-sectional technique were applied. A self-administrative survey was employed with a questionnaire to collect the data. This study used the purposive sampling method for the collection. Structure equation modeling was applied by using Smart PLS 3 to analyze the data. The findings of the current study show that internet access, social influence, and facility access have significant and positive effects on E-health adoption. Cost concerns have a significant and negative influence on the Adoption of E-Health Management services. Results revealed that E-health literacy has a significant and positive moderating role in the association of internet access, facility access, and cost concerns on E-health adoption. Results of this study contribute to the body of literature by finding that internet access, social influence, facility access, and cost concerns have a significant effect on the Adoption of E-Health Management services and E-health literacy is essential to improve the Adoption of E-Health Management services.

Keywords: *E-health adoption, E-health literacy, internet access, social influence, facilities access, cost concerns.*

1. Introduction and Background of the Study

Electronic health has become a new concept of service delivery in healthcare by consolidating technology, commerce, and health (Pagliari et al., 2005). Telemedicine is an applied example of E-health that is categorized into three aspects likely health in our hands, permitting data for health, and making health-associated interactions (Basheer, Raoof, Jabeen, & Hassan, 2021; Greenhalgh et al., 2017). E-health platforms are useful for the monitoring of individuals' health or in a blended care environment. A blended platform in the E-health care environment refers to the online collaboration among individual patients and professionals associated with healthcare services (van Zelst et al., 2021). Similarly, remote vital signs monitoring enabled the full potential of E-health platforms with the support of increasing demand for moveable monitoring equipment generally in the last ten years and particularly after the eruption of the COVID-19 pandemic (Basheer, Siam, Awn, & Hassan, 2019). Now, consumer healthcare behavior is changing from a reactive hospital-centered approach towards a proactive individual-centered approach that focuses on the early discovery and cure of illnesses with personalized health services (Zhao, Yang, & Wong, 2018). After the outbreak of CVID-19, the scope of telemedicine has increased remarkably. With the recognition of telemedicine among the patients as well as service providers, E-health platforms are grown widely.

However, studies that address the association of medical practitioners' attitudes and the perceived utility of E-health platforms are very few. Over time, E-health market platforms are becoming more competitive that enabling developers of E-health platforms to review and add more important components for making them more profitable to medical service providers. In this study, researchers intend to explore the impact of E-health platform features in the relation of attitude towards E-health platforms and the perceived E-Health platforms utility. In addition, E-Health is associated with the software application that incorporates process, methods, and information delivery mechanisms in assisting e-healthcare practices. Moreover, it helps in the management and communication of information in a healthcare system that ultimately provides better performance of healthcare professionals while making practice and improved health of a patient. Accordingly, Varshney, Allahloh, and Sarfraz (2019) described E-Health as the adoption and implementation of "Information and Communication Technology (ICT)" while performing various activities included in the healthcare system. The range of these activities incorporates all of the information such as information regarding the hospital, workers, billing, payment information, and historical record of the patient in the contemporary context.

It also includes internet usage to store, transform, and apply information associated with health. In extension, the E-Health concept has a much wider scope that includes the digitalization of numerous activities and methods of healthcare from primary to advanced services level that introduces new terms of e-appointments, e-records, e-delivery, e-billing, and e-payments. Although, there are numerous implications of ICT in the sector of healthcare, however, this study only focuses on the basic e-Health facilities offered by the clinics such as e-appointment, and e-payments, and e-billing because they are easy and feasible for patients to use. With the help of these basic services, communication among patients and health care service providers become time-saving and easy. In this study, researchers integrate ECM with the Technology Acceptance Model (TAM) for the identification of essential factors. Based on this tradition, this study focus on the integration of security and privacy perceived as an important element of post-adoption behavior to comprehend the e-Health facilities (Wong, 2018). In the literature, previous studies included PPS as background in the study of post-adoption consumer behavior while adopting different e-services that include e-banking and e-management.

In addition, this research also incorporates perceived trust which exceptionally influences E-health adoption. For this reason, this research anticipates that role of these two additional variables will be significantly important while predicting the post-adoption behavior of e-Health. In the literature, evidence found that health education positively influences healthy lifestyle behavior (Sumaedi & Sumardjo, 2020). For this purpose, the internet is one of the communication channels that provide health education. Internet usage carries various advantages for public health education activities extensively (Aziz, Zulkifli, & Rahardjo, 2016; Sumaedi & Sumardjo, 2020; Sumaedi, Sumardjo, Saleh, & Syukri, 2021; Yuan, Ma, Kanthawala, & Peng, 2015). Previously, many researchers found that there is a research gap regarding internet usage for health purposes. Following this, Alhuwail and Abdulsalam (2019) evaluated the purpose behind attaining health information from the internet and the extent of social media use in searching information regarding health in the context of Kuwait. They conclude that the most common reason for getting health information from the internet is that it is perceived to be more informed and interested. However, the amount of health information explored through social media is limited.

With the population of Taiwanese students, Du, Liu, Cai, Hu, and Dong (2020) studied the association among personal features, E-Health knowledge, and healthy lifestyles where they conclude that personal characteristics and E-Health literacy have a significant influence on a healthy lifestyle. Similarly, Mitsutake, Shibata, Ishii, and Oka (2016) evaluated the same association of E-Health literacy towards healthy lifestyle behavior by taking Japanese adults as the population of the study. They conclude that E-Health literacy significantly affects healthy lifestyle behavior. Moreover, Ashraf (2020) evaluated the elements that influence E-Health literacy and the use of web 2.0. In their study, they found that E-Health literacy perceives influence from age, qualification, and number of internet equipment. Web 2.0 uses for health purposes are affected by gender, qualification, and the number of internet devices used to access it. In their study, Kim, Yoo, Hwang, and Cho (2019) evaluated the components that have an impact on the attitude of consumers using Internet health portal and their behavioral purposes for using "health information technology (HIT)". Meanwhile, they empirically establish that attitude of users and behavioral intentions are importantly influenced by the anticipated hazard, practicality, and friendly use.

In addition, they concluded that health position, health concerns, and beliefs, personal values, HIT elements, and HIT self-efficacies indirectly influence the attitude and behavioral intentions of users. According to the literature, numerous factors affect the use of the internet for health purposes. Primarily, internet search behavior that indicates the health literacy of an individual influences internet usage for health purposes. Additionally, other studies found that the use of the internet for health is subjective to factors including social inspirations (M. Al-Azzam & Alazzam, 2019; Khasawneh, Nusair, Arabyat, Karasneh, & Al-Azzam, 2021), access to internet facilities (Al-Azzam & Alazzam, 2019; Khan, Xitong, Ahmad, & Shahzad, 2019) and personal enthusiasm (Yuan et al., 2015). Besides this, numerous researchers concluded significant influence of perceived health information on the internet regarding the use of the internet for health (Boland, Juntunen, Kim, Adams, & Navarro, 2019; Dahleez, Bader, & Aboramadan, 2020; Yu et al., 2021). Moreover, the perceived threat of ailment also significantly impacts internet usage with the purpose of health (Ahadzadeh, Sharif, Ong, & Khong, 2015; Koivumäki et al., 2017; Mattila, Koivumäki, Caldwell, & Semini, 2017). In the literature, researchers conducted studies regarding internet usage for health purposes but still.

Some research gaps prevail first, no research model exists that at the same time evaluate the influence of internet access behavior, social inspiration, access of internet facility, and cost considerations for purposes of health. Next, hedonic consumption theory states that motivation includes two kinds of motivations i.e. hedonic and utilitarian motivation (Hirschman & Holbrook, 1982). While using the internet by someone, both kinds of motivations may be there. In addition, both of these kinds of motivations may have dissimilar effects on the use of the internet. However, no research in the literature evaluates the influence of motivation considering utilitarian and hedonic motivation distinctively. Then, the social influence model explains that social influence encompasses two kinds of norms i.e. descriptive and injunctive norms (Bossuyt, Pouillon, Bonnaud, Danese, & Peyrin-Biroulet, 2017). In the prevailing studies regarding the use of the internet for health meanings, research is dominated by the injunctive norms of social influence. In contrast, descriptive kind of norm may have a more significant influence on the use of the internet for health reasons (Yan, Basheer, Irfan, & Rana, 2020; Yuan et al., 2015). Still, this research gap is not comprehensively addressed by the researchers. By considering this research gap, researchers in this study intended to evaluate the influence of internet searching behavior, social influence, and access of internet facilities, and cost concerns on E-health adoption in the Saudi Arabian context with the moderating effect of E-health literacy.

2. Literature Review

Adoption of E-Health Management: With the rapid and increasing use of internet-based ICT in various areas, it has become an important topic of research (Ahadzadeh et al., 2015; Alhuwail & Abdulsalam, 2019; Leung & Chen, 2019). Social interventions are also guided by the use of the internet to change behavior regarding a healthy lifestyle (Lee, Le, Lal, Engel, & Mihalopoulos, 2021; Yu et al., 2021). Internet usage is described by the researchers as actions of individuals while using the internet for certain activities including accessing or sharing content (Alhuwail & Abdulsalam, 2019; Bol, Helberger, & Weert, 2018; Klinger et al., 2015; Vázquez et al., 2018). Accordingly, the use of the internet for health purposes can be described as activities of individuals while using the internet for certain actions that facilitate his or her health including searching or communicating contents associated with health. Furthermore, behavior elements contain cognitive, emotional, conative, and spiritual elements. Aziz et al. (2016) differentiate these actions from the other three elements of behavior evaluation. Research of Sumaedi and Sumardjo (2020) is followed by this study because that there can be a difference among the influencing actions as compared to the factors that influence other components of behavior.

Use of internet in various fields is studied by the numerous researchers (Alhuwail & Abdulsalam, 2019; Bol et al., 2018; Korkmaz Aslan, Kartal, Turan, Taşdemir Yiğitoğlu, & Kocakabak, 2021; Lee et al., 2021). In general, the use of the internet is measured by the frequency of internet usage for particular activities (Alhuwail & Abdulsalam, 2019; Bol et al., 2018; Dashti, Peyman, Tajfard, & Esmaeeli, 2017; Hoque & Bao, 2015). Hence, more often a person searches for his activities on the internet, the level of internet usage increases. Concerning the consumption of the internet for health reasons, the use of the internet is also measured by the rate of internet usage. Mostly, researchers measure the level of internet usage for health purposes by considering the searching rate of the internet (Bol et al., 2018; Van Deen et al., 2016). In addition, some researchers use the measurement of internet usage by considering the searching frequency of the internet as well as other activities on the internet (Mattila et al., 2017) divides into three classes namely health caring, material searching regarding health, and sharing its information. For this study, the second method is opted because of two reasons. Firstly, the advancement of ICT has made internet channels appropriate for obtaining health data and other associated events (Asada, Basheerb, Irfanc, Jiangd, & Tahir, 2020; Zimmerman & Shaw Jr, 2020).

Domínguez-Mayo et al. (2015) stated that E-Health includes e-health care, e-health material, e-health business, e-health communication, and e-health platform. Secondly, multiple social media platforms are there that enable users to collaborate and communicate information regarding health (Tennant et al., 2015). Alternatively, this method allows users to use the internet for more than one purpose at the same time. By considering this, this research measures the use of the internet for health reasons by considering the searching regularity of health information, use of health sessions, and sharing of information regarding health on the internet. By integrating findings of previous studies regarding the use of the internet with the theories namely "Theory of Planned Behavior" (TPB) (Ajzen, 2020), "Health Belief of Model" (HBM) (Abraham &

Sheeran, 2015), "Hedonic Consumption Theory" (Saeed, Yang, & Sinnappan, 2009), and "Unified Theory of Acceptance and Use of Technology" (UTAUT)(Venkatesh, Thong, & Xu, 2012), researchers proposed in this research that use of the internet for health purposes is influenced by the many factors. These factors consist of internet access behavior that includes purpose, approaches and information, cost concerns, factors of social influence that include injunctive and descriptive norms, access to the facility, factors of motivation including hedonic and utilitarian motivation and perceived e-information regarding health.

Hypotheses Development

Internet Access Behavior: The digital divide phenomenon is among the topics that are commonly discussed (Van Deursen & Van Dijk, 2019). This phenomenon represents a difference in internet access among individuals. Internet access is defined by the researchers as a state that facilitates users to utilize the internet (Van Deursen & Helsper, 2015b). In general, researchers are agreed upon the two kinds of internet access are access linked with the internet facilities and access linked with the behavior of individuals(van Laar, van Deursen, van Dijk, & de Haan, 2019). Rahardjo, Lubis, and Harijati (2016) state that access linked with the behavior of individuals is termed as Internet access behavior. Moreover, Mulyadi, Rahardjo, and Basuki (2016) described that Internet access behavior consists of cognitive, conative, and affective components. Alternatively, it includes knowledge, attitude, and intention of an individual behind internet use. This is in line with the studies of Van Deursen and Van Dijk (2019) and van Laar et al. (2019).

Here, knowledge refers to the vision possessed by an individual regarding the use of the internet (Rahardjo et al., 2016). Furthermore, attitude is concerned with the spirits of an individual concerning the internet and its use (Ajzen, 2020; Rahardjo et al., 2016; Raoof, Basheer, Shabbir, Ghulam Hassan, & Jabeen, 2021). Furthermore, the intention is concerned with the tendency of using the internet by someone (Maringer et al., 2018). For the two reasons, this research considers internet access behavior as knowledge, attitude, and intention of an individual. Firstly, it is proved in the literature that these three components are concerned with the use of the internet (Sumaedi & Sumardjo, 2020). Secondly, behavior associated with health that is shaped by the knowledge, attitude, and intention have a greater tendency of sustainability (Petty, Briñol, & Tormala, 2002). Based on the above discussion, hypotheses are formed as under:
Hypothesis 1: Internet access behavior has a significant influence on the Adoption of E-Health Management.

Social Influence: Social influence (SI) is concerned with the perception of patients that how their associates believe about E-health adoption (Venkatesh et al., 2012). The idea behind the SI is that the behavior of an individual is motivated by the perception of how others will recognize him/her after using services of E-health. Accordingly, friends, families, and groups in society may influence the decision of a user towards E-health (Nkosi & Mekuria, 2010; Quaosar, Hoque, & Bao, 2018). In the opinion of Al-Khowaiter, Dwivedi, and Williams (2015), SI is pertinent to the E-health services because of the reason that interaction towards E-health is potentially evaluated by others in social life and that influential groups shape the intention of technology adoption (Nadri, Rahimi, Afshar, Samadbeik, & Garavand, 2018). Studies on the information systems concluded a significant association of SI and adoption of E-Services (Nadri et al., 2018; Y. Sun, Wang, Guo, & Peng, 2013). Illustratively, Sun and Tang (2011) determined that SI shapes the behavioral intention of using services regarding E-health.

Ciranka and van den Bos (2021) further found that there is an association between the relation of SI and behavioral intention of users of health care digital information applications. While studying this relation, there are two groups of scholars with two different points of view. First, social influence is guidance given from those people that are admitted significant for someone while taking some decision (Al-Azzam, Alazzam, & Al-Manasra, 2019; Duarte & Pinho, 2019; Khatri et al., 2015). Moreover, this group of researchers considers as the injective norm of social influence while shaping behavior. According to the second stream, social influence is comprised of descriptive and injunctive norms (Pedersen, Grønhøj, & Thøgersen, 2015; Sharps & Robinson, 2017). As compared to the injunctive norm, descriptive norm describes the degree of importance for those who are considered significant by the person who is performing behavior particularly (Koenig-Lewis, Marquet, Palmer, & Zhao, 2015; Sharps & Robinson, 2017). In this way, the injunctive norm is associated with the endorsements of important people while practicing a behavior by someone.

However, the descriptive norm is concerned with the practices made by those people who are related to behavior (Sun & Tang, 2011; van Zelst et al., 2021). Generally, studies associated with ICT and internet usage use injunctive norms in the evaluation of social influence (Al-Azzam & Alazzam, 2019; Murray & Schaller, 2016; Yu et al., 2021). In contrast, some researchers highlighted that only injunctive norms are not enough for the social influence representation and they added descriptive norms too for the purpose (Bautista Jr, Jeong, & Pandey, 2020; Lazuras & Dokou, 2016). Social influence measured by using only injunctive norm may cause an insignificant effect of social influence on ICT (Yuan et al., 2015). Hence, this study incorporates both injective as well as subjective norms to evaluate social influence. The use of the internet can be subjective to the social influence according to UTAUT (Khatimah, Susanto, & Abdullah, 2019). Moreover, some of the researchers determined that usage of E-Health services is impacted by social influence (Al-Azzam & Alazzam, 2019). Based on the above discussion, the hypothesis is formed as under:
Hypothesis 2: Social influence has a significant influence on the Adoption of E-Health Management.

Facility Access: In the literature, internet facility access and physical internet access are the terms that are often used in the same meanings (Pitchford et al., 2017). For the first time, this concept was recognized as the cause of internet usage level differences. From the perspective of theory, this concept is the substitute of facilitating conditions concept prevailed in UTAUT. UTAUT states that the easiness of using the internet results in more internet use (Venkatesh et al., 2012). By defining internet access facility, it is the state of resources having an individual that facilitates the use of the internet (Van Deursen & Helsper, 2015a; Van Deursen & Van Dijk, 2019). These resources made easy access to the internet for users (Cajita, Hodgson, Lam, Yoo, & Han, 2018). More comprehensively, internet access facility comprises internet network availability, infrastructure to support this network, equipment of ICT, and required finance to meet these needs (Van Deursen & Van Dijk, 2019). Concerning this research, internet facility access contains ICT equipment availability required for usage of internet, finance required for internet usage, Wi-Fi networks, and electricity availability. According to UTAUT, the use of the internet is influenced by the internet access facility (Venkatesh et al., 2012). More specifically, some studies found that the use of e-networks for health purposes is associated positively with access to facilities (Duarte & Pinho, 2019).

Facility access is the extent of a patient's perception that a physical or technical organization prevails to facilitate E-Health usage. Bhattacherjee, Davis, Connolly, and Hikmet (2018) determined that support of infrastructure significantly play role in the usage of e-facilities. Further, it was concluded that facility access positively improves the behavioral intentions of clients for using smartphones to avail E-Health facilities (Boontarig, Chutimaskul, Chongsuphajaisiddhi, & Papasratorn, 2012; Rahimi, Nadri, Afshar, & Timpka, 2018). However, users are required to possess aptitude, information, and means essentially required for E-Health usage. Appropriate E-Health services usage is dependent on the accessibility of infrastructure and networks of organizations needed for better results. So, the degree of patient's perception regarding infrastructure and network in the effective use of E-Health services may decide the use of e-services. In response to the lack of means and technical support, some of the users are reluctant to adopt these services. For this reason, it is expected that perceived resources facilitation has a positive impact on the intention of using E-Health. Based on the above discussion, the hypothesis is formed as under:
Hypothesis 3: Facility access has a significant influence on the Adoption of E-Health Management.

Cost Concerns: Cost concerns (CCs) are associated with the perceived degree of expenses that a patient recognizes while opting for E-Health likewise cost of equipment Ahuja and Khazanchi (2016) and its financial burdens. Behavioral decision theory Gong (2015) states that the cost-benefit ratio significantly impacts technology adoption. Meanwhile, if users of E-Health services presume that benefits from E-Health are more than its cost of investment, they will show a positive behavior towards E-health usage. Yarbrough and Smith (2007) have the opinion that cost elements are widely overlooked in the previous studies on the topic. Besides, Aydin, Özer, and Arasil (2005) paid to focus on the importance of switching costs on the loyalty of customers in their national indices of customer satisfaction. Although the Adoption of E-Health Management services results in better service delivery and increase clinical efficiency, the perceived cost of E-health technology is very high. In the overall E-health cost, not only devices cost include but it also includes development, configuration, transferring, and maintenance expenses (Hosseini, Fatemifar, & Rahimzadeh, 2015). Moreover, learning costs may also be included in it because learning about the newly introduced services is required (Burnham, Frels, & Mahajan, 2003).

However, bad experiences of clients regarding slow speed, bad quality, pause, and missing links may lead users to dissatisfaction. Accordingly, the cost may be the deciding factor for customers for accepting E-health services. If the cost of a new E-health app is high in the perception of a patient, he/she will avoid its use. Consequently, the high cost of E-health value-added services negatively influences the intention of the customer in choosing that particular technology. Cheong and Park (2005) also conducted a study in the Korean context by incorporating the perceived cost element to examine the intention of using E-health services. According to some researchers, the cost associated with accessing, devices, and transactions charge importantly shapes the perception of users, and negative perception influences adoption of services negatively (Cheong & Park, 2005; Chong, Chan, & Ooi, 2012). Some of the studies in the literature also concluded that cost is a more significant element of deciding intention regarding the use of the internet as compared to privacy apprehensions (Lin, Lu, & Hsieh, 2011). Based on the above discussion, the hypothesis is formed as under:
Hypothesis 4: Cost concerns have a significant influence on the Adoption of E-Health Management.

E-Health Literacy: The E-health literacy (E-HL) concept is described as the capability of searching, exploring, understanding, and evaluating information regarding health by using electronic channels and implementing this acquired knowledge to resolve a health problem (Coşkun & Bebiş, 2015). Users of smartphones commonly search for health information or issues on their devices. Pew Research Centre conducted a survey and concluded that 62% of users of smart devices in the US search about health topics (Briones, 2015). Recent studies in the context of Saudi Arabia concluded that an increasing trend of internet and social media use for health information search (Alsahafi, Gay, & Khwaji, 2020; Mehmood, Ghani, Chen, & Alghamdi, 2019). For appropriate use of e-health services, essential e-HL abilities are needed that enable users to search and comprehend health information (Walsh et al., 2017). The transformation from a hospital-centric approach to a consumer-centric approach guides governments to stimulate healthcare provision cost reduction and inspire consumers to resolve health issues proactively (Koumakis et al., 2017; Vamos et al., 2019). This transformation also highlights the significance of healthcare education and training to the users (Alsahafi et al., 2020; Walsh et al., 2017). Therefore, e-HL is now becoming an important area of consideration for public health in response to the advancing HIT that enabled healthcare users with easy availability of health-associated knowledge by using various media channels (Mackert, Mabry-Flynn, Champlin, Donovan, & Pounders, 2016). Electronic information sources are increasing rapidly that enable users to search, recognize.

Obtain and implement concerning health information effectively with consumer-centric technologies specifically (Magsamen-Conrad, Dillon, Billotte Verhoff, & Faulkner, 2019). The main purpose behind the implementation of the national integrated system is to provide individuals more access to their health histories and to motivate them for participating more effectively in their health management (H. Kim & Xie, 2017). Several studies found a significant association of e-HL with health technologies usage. Among the elements that create hurdles in the adoption of My Health Record, e-HL is also one of them in the Australian context (Walsh et al., 2017). Hence, the E-HL level influences the perception level of healthcare users regarding the effectiveness of E-Health services. People with a higher level of e-HL were found to be more positive about the Adoption of E-Health Management technologies because they consider it highly beneficial and ultimately help them in improving their overall health (Magsamen-Conrad et al., 2019). Based on the above discussion, the hypothesis is formed as under:
Hypothesis 5: E-health literacy has a significant moderating role in the relationship between internet access and Adoption of E-Health Management.
Hypothesis 6: E-health literacy has a significant moderating role in the relationship of social influence and Adoption of E-Health Management.
Hypothesis 7: E-health literacy has a significant moderating role in the relationship of facility access and Adoption of E-Health Management.
Hypothesis 8: E-health literacy has a significant moderating role in the relationship of cost concerns and the Adoption of E-Health Management.

3. Methodology

Data was collected by applying a survey questionnaire from the target population for analysis purposes. The Saudi residents were the population of the current study who used E-health applications for health purposes.

The current study examined the role of internet access, social influence, facility access, and cost concerns on E-health adoption in Saudi Arabia with moderating role of E-health literacy. The population of the current study is unknown because there is no database of those Saudi citizens who have used E-health applications. Therefore, this study employed purposive sampling for the collection of data. The quantitative research approach was applied and a survey with purposive sampling was initiated. The purposive sampling is employed because this sampling technique is adequate in these conditions (Ahmad Sabir, Mohammad, & Kadir Shahar, 2019; Park & Sullivan, 2009). Moreover, this sampling method is still suitable for the estimation of the literature-based model (M. F. Basheer, Hameed, Sabir, & Jehangir, 2019; Hameed, Waseem, Sabir, & Dahri, 2020). Based on the selected sampling technique, a total of 300 questionnaires were distributed, however, only 212 responses were obtained, out of 212 received responses 14 responses were incomplete. Incomplete questionnaires were not included in the analysis. The majority of the respondents were 25- 35 years old with school education. The five-point Likert scale was applied with strongly disagree to strongly agree for the measurement of the variable. For hypotheses testing, structure equation modeling was employed by using Smart-PLS software.

4. Analysis and Discussion

Figure: 1 A Two-Step Process of PLS Path Model Assessment. To Analyze the Data and Report of Results, the Two-Step Approach was used in Smart-PLS Statistical Software According to the Recommendations of Henseler, Ringle, and Sinkovics (2009). Below Fig. 1 Shows the Two-Step PLS-SEM Process

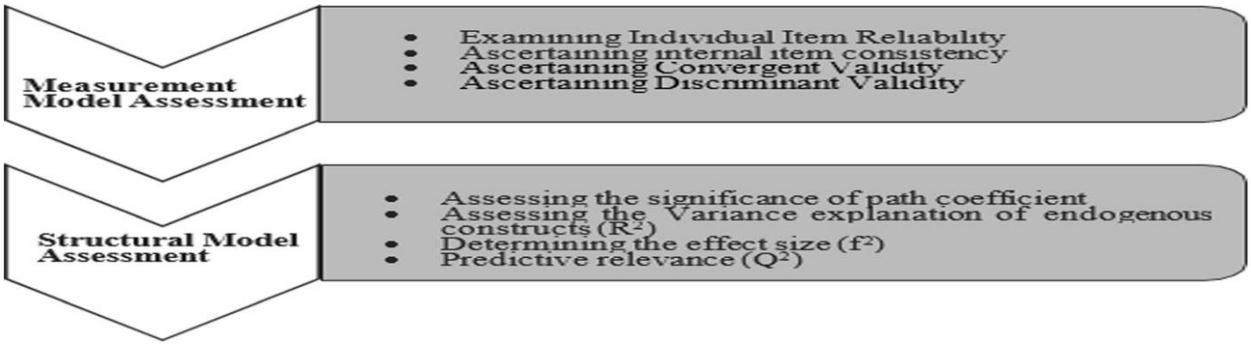

Source: (Henseler et al., 2009).

Measurement Model Assessment: Measurement model analysis was executed to inspect the validity and reliability of constructs. The threshold value of variable reliability is based on Cronbach's alpha coefficient, composite reliability (CR), and average variance extracted (AVE). The reliability of construct is fulfilled if the value of Cronbach's alpha (α) is equal to or above 0.6 and the value of CR and AVE is above or equal to 0.5 (George & Mallery, 2003). The validity of the construct is measured by the value of the square root of AVE and the value of HTMT ratios (Fornell & Lacker, 1981). The measurement model's results are given in Figure 2 and Table 1, Table 2, and Table 3.

Figure 2: Measurement Model Assessment

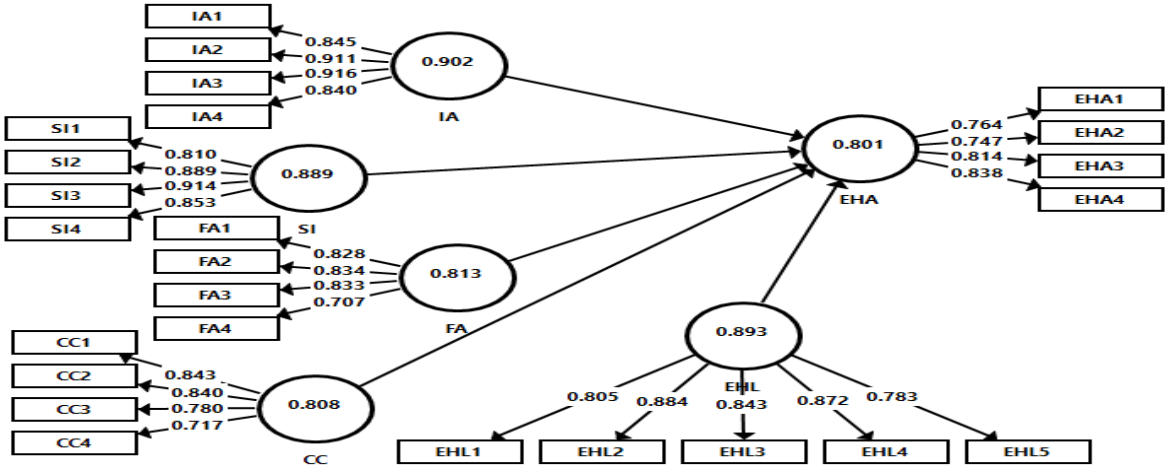

Table 1: Internal Consistency, Convergent Validity, Composite Reliability and AVE

Construct	Indicators	Loadings	Cronbach's alpha	Composite Reliability	AVE
E-Health Adoption	EHA1	0.764	0.801	0.870	0.626
	EHA2	0.747			
	EHA3	0.814			
	EHA4	0.838			
Internet access	IA1	0.845	0.902	0.931	0.772
	IA2	0.911			
	IA3	0.916			
	IA4	0.840			
Social influence	SI1	0.810	0.889	0.924	0.752
	SI2	0.889			
	SI3	0.914			
	SI4	0.853			
Facility access	FA1	0.828	0.813	0.878	0.644
	FA2	0.834			
	FA3	0.833			
	FA4	0.707			
Cost concerns	CC1	0.843	0.808	0.874	0.635
	CC2	0.840			
	CC3	0.780			
	CC4	0.717			
E-Health literacy	EHL1	0.805	0.893	0.922	0.702
	EHL2	0.884			
	EHL3	0.843			
	EHL4	0.872			
	EHL5	0.783			

Table 1 indicates that all constructs are established the reliability and validity of the value of Cronbach's alpha (α), CR and AVE are according to the threshold values (Fornell & Lacker, 1981).

Table 2: Fornell-Larcker Criterion

	CC	EHA	EHL	FA	IA	SI
CC	0.797					
EHA	0.658	0.792				
EHL	0.545	0.636	0.838			
FA	0.490	0.520	0.529	0.802		
IA	0.448	0.518	0.758	0.520	0.879	
SI	0.336	0.403	0.466	0.582	0.450	0.867

Table 2 indicates that this study established discriminant validity according to the recommendations of Fornell and Lacker (1981) because the square root of AVE is greater than the correlation with other variables.

Table 3: Heterotrait-Monotrait Ratio (HTMT)

	CC	EHA	EHL	FA	IA	SI
CC						
EHA	0.798					
EHL	0.627	0.752				
FA	0.596	0.648	0.622			
IA	0.512	0.601	0.834	0.601		
SI	0.387	0.478	0.522	0.684	0.493	

Table 3 indicated that the values of HTMT are established the discriminant validity of the model because the value of HTMT is less than 0.85. Therefore, this study achieves the criteria of HTMT to confirm the discriminant validity.

Structural Model Assessment

Figure 3: Structural Model Assessment

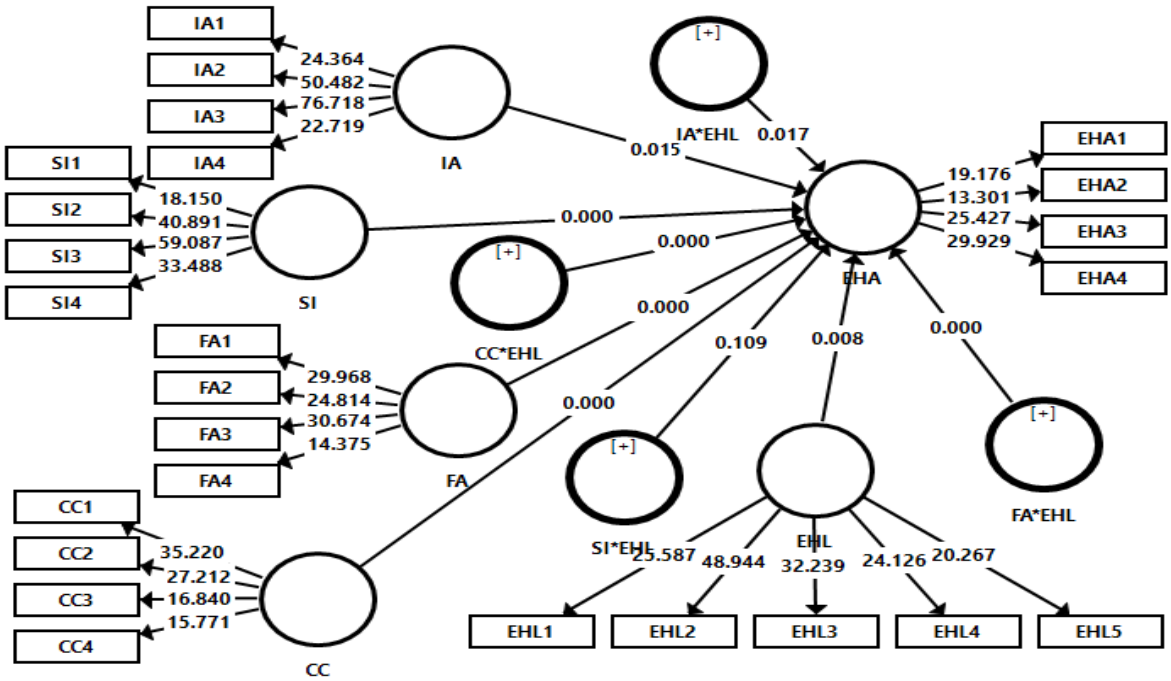

Table 4: Structural Model Assessment (Direct Effect Results and Decision)

Hypotheses	Relationship	Beta	STD	T Value	P Values
H_1	**IA -> EHA**	0.427	0.082	2.780	0.015
H_2	**SI -> EHA**	0.365	0.070	5.241	0.000
H_3	**FA -> EHA**	0.243	0.090	2.681	0.000
H_4	**CC -> EHA**	-0.427	0.058	7.368	0.000

The bootstrapping method in PLS statistical software was employed for the estimation of hypotheses of this study. Results show that internet access has a significant and positive effect on the Adoption of E-Health Management services (β= 0.427, t= 2.780), therefore, H_1 is accepted on the statistical ground. Social influence also has a significant effect on the Adoption of E-Health Management services (β= 0.365, t= 5.241), therefore, **H_2** is accepted. Moreover, facilities access has a significant and positive role in the Adoption of E-Health Management services (β= 0.243, t= 2.681), thus, H_3 is accepted. Furthermore, cost concern has a significant but negative effect on the Adoption of E-Health Management services (β= -0.427, t= 7.368), hence, H_4 is accepted.

Table 5: Structural Model Assessment (Moderation Effects)

Hypotheses	Relationship	Beta	STD	T Value	P Values
H_5	**IA*EHL -> EHA**	0.348	0.092	0.348	0.017
H_6	**SI*EHL -> EHA**	-0.101	0.063	1.605	0.109
H_7	**FA*EHL -> EHA**	0.262	0.080	3.281	0.000
H_8	**CC*EHL -> EHA**	0.310	0.068	4.568	0.000

Table 5 indicates the moderation role of E-health literacy on the relationship of internet access, social influence, facility access, and cost concerns on E-health adoption. Results indicated that E-health literacy has a significant moderation effect on the relationship of internet access with the Adoption of E-Health Management services (β= 0.348, t= 0.348). Hence, H_5 is accepted. Moreover, E-health literacy significantly moderates the relationship of facilities access with the Adoption of E-Health Management services (β= 0.262, t= 3.281). Therefore, H_6 is supported. Furthermore, E-health literacy has a significant moderating effect on the relationship of cost concerns with the Adoption of E-Health Management services (β= 0.310, t= 4.568). Thus, **H_6** is supported.

5. Discussion and Conclusion

This study aimed to examine the effect of internet access, social influence, facility access, and cost concerns on E-health adoption in Saudi Arabia with moderating role of E-health literacy. This study found that internet access significantly affects the Adoption of E-Health Management services. More specifically, internet access behavior positively affects the adoption of electronic health services in Saudi Arabia. This means that the Adoption of E-Health Management services depends on someone's internet access or how frequently he uses internet services. This result was supported by TPB (Ajzen, 1991) and UTAUT (Venkatesh et al., 2012). Furthermore, the findings of the current study show that social influence also has a significant and positive effect on the adoption of electronic health services. This finding is in line with the study of Alaiad, Alsharo, and Alnsour (2019). Facilities access also has a significant and positive effect on the adoption of electronic health services, while cost concerns have a significant but negative effect on the adoption of electronic health services.

These results are consistent with Alaiad et al. (2019). Findings depict that E-health literacy has a significant moderating role in the relationship of internet access, facilities access, and cost concerns with the adoption of electronic health services. This study contributes to the literature on E-health adoption in several ways. Based on the findings of the current study, the government and related organizations need to improve the level of someone's internet access and facilities access to increase the Adoption of E-Health Management services. Moreover, E-health plays an important role in the Adoption of E-Health Management services. Therefore, the government should focus to enhance the knowledge of someone concerning E-health (Paige et al., 2018).

Based on the limitations, future studies are needed to be conducted in other contexts to observe the constancy of our study findings. Second, future research is needed by incorporating other factors that may affect the Adoption of E-Health Management services.

References

Abraham, C. & Sheeran, P. (2015). The health belief model. *Predicting health behavior: Research and practice with social cognition models,* 2, 30-55.

Ahadzadeh, A. S., Sharif, S. P., Ong, F. S. & Khong, K. W. (2015). Integrating health belief model and technology acceptance model: an investigation of health-related internet use. *Journal of medical Internet research,* 17(2), e3564.

Ahmad Sabir, S., Mohammad, H. & Kadir Shahar, H. (2019). The role of overconfidence and past investment experience in herding behavior with a moderating effect of financial literacy: evidence from Pakistan stock exchange. *Asian Economic and Financial Review,* 9(4), 480-490.

Ahuja, V. & Khazanchi, D. (2016). Creation of a conceptual model for adoption of mobile apps for shopping from e-commerce sites–An Indian context. *Procedia Computer Science,* 91, 609-616.

Ajzen, I. (1991). The theory of planned behavior. *Organizational behavior and human decision processes,* 50(2), 179-211.

Ajzen, I. (2020). The theory of planned behavior: Frequently asked questions. *Human Behavior and Emerging Technologies,* 2(4), 314-324.

Al-Azzam, M. & Alazzam, M. B. (2019). Smart city and smart-health framework, challenges and opportunities. *Int. J. Adv. Comput. Sci. Appl,* 10(2), 171-176.

Al-Azzam, M. K., Alazzam, M. B. & Al-Manasra, M. K. (2019). MHealth for decision-making support: A case study of EHealth in the public sector. *International Journal of Advanced Computer Science and Applications,* 10(5), 381-387.

Al-Khowaiter, W. A., Dwivedi, Y. K. & Williams, M. D. (2015). Examining the role of social influence, usefulness and ease of use for determining the mandatory use of a human resource information system in the context of Saudi Ministries. *International Journal of Electronic Government Research (IJEGR),* 11(3), 24-42.

Alaiad, A., Alsharo, M. & Alnsour, Y. (2019). The determinants of m-health adoption in developing countries: An empirical investigation. *Applied clinical informatics,* 10(05), 820-840.

Alhuwail, D. & Abdulsalam, Y. (2019). Assessing electronic health literacy in the state of Kuwait: Survey of internet users from an Arab state. *Journal of medical Internet research,* 21(5), e11174.

Alsahafi, Y. A., Gay, V. & Khwaji, A. A. (2020). Factors affecting the acceptance of integrated electronic personal health records in Saudi Arabia: The impact of e-health literacy. Health Information Management Journal, 1833358320964899.

Asada, A., Basheerb, M. F., Irfanc, M., Jiangd, J. & Tahir, R. (2020). Open-Innovation and Knowledge Management in Small and Medium-Sized Enterprises (SMEs): The role of External Knowledge and Internal Innovation. *Revista Argentina de Clínica Psicológica,* 29(4), 80-90.

Ashraf, B. N. (2020). Stock markets' reaction to COVID-19: Cases or fatalities? *Research in International Business and Finance,* 54, 101249.

Aydin, S., Özer, G. & Arasil, Ö. (2005). Customer loyalty and the effect of switching costs as a moderator variable: A case in the Turkish mobile phone market. Marketing intelligence & planning.

Aziz, R., Zulkifli, F. Y. & Rahardjo, E. T. (2016). Dual-arm modified-spiral textile antenna for wearable medical communication applications. Paper presented at the 2016 International Conference on Electromagnetics in Advanced Applications (ICEAA).

Basheer, M., Siam, M., Awn, A. & Hassan, S. (2019). Exploring the role of TQM and supply chain practices for firm supply performance in the presence of information technology capabilities and supply chain technology adoption: A case of textile firms in Pakistan. *Uncertain Supply Chain Management,* 7(2), 275-288.

Basheer, M. F., Hameed, W. U., Sabir, S. A. & Jehangir, M. S. (2019). Islamic Business Ethics and Islamic Banks Performance in Malaysia: Does Sincerity Matter? *Hamdard Islamicus,* 42(4), 225-241.

Basheer, M. F., Raoof, R., Jabeen, S. & Hassan, S. G. (2021). Exploring the Nexus Among the Business Coping Strategy: Entrepreneurial Orientation and Crisis Readiness–A Post-COVID-19 Analysis of Pakistani

SMEs Handbook of Research on Entrepreneurship, Innovation, Sustainability, and ICTs in the Post-COVID-19 Era (pp. 317-340): IGI Global.

Bautista Jr, R., Jeong, L. S. & Pandey, S. (2020). Will Cause-Related Marketing Affect the American and Filipino College Students' Purchase Intention? *Asia-Pacific Social Science Review,* 20(4).

Bhattacherjee, A., Davis, C. J., Connolly, A. J. & Hikmet, N. (2018). User response to mandatory IT use: A coping theory perspective. *European Journal of Information Systems,* 27(4), 395-414.

Bol, N., Helberger, N. & Weert, J. C. (2018). Differences in mobile health app use: a source of new digital inequalities? *The Information Society,* 34(3), 183-193.

Boland, D. H., Juntunen, C. L., Kim, H. Y., Adams, E. M. & Navarro, R. L. (2019). Integrated behavioral health curriculum in counseling psychology training programs. *The Counseling Psychologist,* 47(7), 1012-1036.

Boontarig, W., Chutimaskul, W., Chongsuphajaisiddhi, V. & Papasratorn, B. (2012). Factors influencing the Thai elderly intention to use smartphone for e-Health services. Paper presented at the 2012 IEEE symposium on humanities, science and engineering research.

Bossuyt, P., Pouillon, L., Bonnaud, G., Danese, S. & Peyrin-Biroulet, L. (2017). E-health in inflammatory bowel diseases: more challenges than opportunities? *Digestive and Liver Disease*, 49(12), 1320-1326.

Briones, R. (2015). Harnessing the web: how e-Health and e-Health literacy impact young adults' perceptions of online health information. *Medicine,* 2.0, 4(2).

Burnham, T. A., Frels, J. K. & Mahajan, V. (2003). Consumer switching costs: a typology, antecedents, and consequences. *Journal of the Academy of Marketing Science,* 31(2), 109-126.

Cajita, M. I., Hodgson, N. A., Lam, K. W., Yoo, S. & Han, H. R. (2018). Facilitators of and barriers to mHealth adoption in older adults with heart failure. *Computers, informatics, nursing: CIN,* 36(8), 376.

Cheong, J. H. & Park, M. C. (2005). Mobile internet acceptance in Korea. *Internet research*.

Chong, A. Y. L., Chan, F. T. & Ooi, K. B. (2012). Predicting consumer decisions to adopt mobile commerce: Cross country empirical examination between China and Malaysia. *Decision support systems,* 53(1), 34-43.

Ciranka, S. & van den Bos, W. (2021). Adolescent risk-taking in the context of exploration and social influence. *Developmental Review,* 61, 100979.

Coşkun, S. & Bebiş, H. (2015). Psychometric evaluation of a Turkısh version of the e-health literacy scale (e-heals) in adolescents. *Gülhane Tip Dergisi,* 57(4), 378.

Dahleez, K. A., Bader, I. & Aboramadan, M. (2020). E-health system characteristics, medical performance and healthcare quality at UNRWA-Palestine health centers. Journal of Enterprise Information Management.

Dashti, S., Peyman, N., Tajfard, M. & Esmaeeli, H. (2017). E-Health literacy of medical and health sciences university students in Mashhad, Iran in 2016: a pilot study. *Electronic physician,* 9(3), 3966.

Domínguez-Mayo, F. J., Escalona, M., Mejías, M., Aragón, G., García-García, J. A., Torres, J. & Enríquez, J. (2015). A strategic study about quality characteristics in e-health systems based on a systematic literature review. The Scientific World Journal, 2015.

Du, S., Liu, W., Cai, S., Hu, Y. & Dong, J. (2020). The efficacy of e-health in the self-management of chronic low back pain: A meta-analysis. *International journal of nursing studi*es, 106, 103507.

Duarte, P. & Pinho, J. C. (2019). A mixed-methods UTAUT2-based approach to assess mobile health adoption. *Journal of Business Research,* 102, 140-150.

Fornell, C. & Lacker, D. (1981). Two structural equation models with unobservable variables and measurement error. 18.

George, D. & Mallery, P. (2003). Reliability analysis. SPSS for Windows, step by step: a simple guide and reference, 14th Ed. Boston: Allyn & Bacon, 222-232.

Gong, S. (2015). The Mobile Technology Acceptance Mechanism of Ningbo Electronic Commerce Enterprise under Government Intervention. Paper presented at the International Conference on Materials Engineering and Information Technology Applications (MEITA 2015).

Greenhalgh, T., Wherton, J., Papoutsi, C., Lynch, J., Hughes, G., Hinder, S. & Shaw, S. (2017). Beyond adoption: a new framework for theorizing and evaluating non-adoption, abandonment, and challenges to the scale-up, spread, and sustainability of health and care technologies. *Journal of medical Internet research,* 19(11), e367.

Hameed, W. U., Waseem, M., Sabir, S. A. & Dahri, A. S. (2020). Effect of enterprise risk management system and implementation problem on financial performance: An empirical evidence from Malaysian listed firms. *Abasyn Journal of Social Sciences*, 12.

Henseler, J., Ringle, C. M. & Sinkovics, R. R. (2009). The use of partial least squares path modeling in international marketing New challenges to international marketing: Emerald Group Publishing Limited.

Hirschman, E. C. & Holbrook, M. B. (1982). Hedonic consumption: emerging concepts, methods and propositions. *Journal of Marketing,* 46(3), 92-101.

Hoque, M. R. & Bao, Y. (2015). Cultural influence on adoption and use of e-Health: evidence in Bangladesh. *Telemedicine and e-Health,* 21(10), 845-851.

Hosseini, M. H., Fatemifar, A. & Rahimzadeh, M. (2015). Effective factors of the adoption of mobile banking services by customers. *Kuwait Chapter of the Arabian Journal of Business and Management Review,* 4(6), 1.

Khan, I., Xitong, G., Ahmad, Z. & Shahzad, F. (2019). Investigating factors impelling the adoption of e-health: a perspective of African expats in China. *SAGE Open,* 9(3), 2158244019865803.

Khasawneh, R. A., Nusair, M. B., Arabyat, R. M., Karasneh, R. & Al-Azzam, S. (2021). The Association Between e-Health Literacy and Willingness to Deprescribe Among Patients with Chronic Diseases: A Cross-Sectional Study from Jordan. Telemedicine and e-Health.

Khatimah, H., Susanto, P. & Abdullah, N. L. (2019). Hedonic motivation and social influence on behavioral intention of e-money: The role of payment habit as a mediator. *International Journal of Entrepreneurship,* 23(1), 1-9.

Khatri, C., Chapman, S. J., Glasbey, J., Kelly, M., Nepogodiev, D., Bhangu, A. & Committee, S. (2015). Social media and internet-driven study recruitment: evaluating a new model for promoting collaborator engagement and participation. *PloS one,* 10(3), e0118899.

Kim, H. & Xie, B. (2017). Health literacy in the eHealth era: A systematic review of the literature. *Patient education and counseling,* 100(6), 1073-1082.

Kim, M. N., Yoo, Y. S., Hwang, K. H. & Cho, O. H. (2019). The effects of office workers' attitudes to internet health information, e-health literacy on health information-seeking behavior and health-related behavioral intention. *Journal of Digital Convergence,* 17(11), 357-367.

Klinger, E. V., Carlini, S. V., Gonzalez, I., Hubert, S. S., Linder, J. A., Rigotti, N. A. & Haas, J. S. (2015). Accuracy of race, ethnicity, and language preference in an electronic health record. *Journal of general internal medicine,* 30(6), 719-723.

Koenig-Lewis, N., Marquet, M., Palmer, A. & Zhao, A. L. (2015). Enjoyment and social influence: predicting mobile payment adoption. *The Service Industries Journal,* 35(10), 537-554.

Koivumäki, T., Pekkarinen, S., Lappi, M., Väisänen, J., Juntunen, J. & Pikkarainen, M. (2017). Consumer adoption of future MyData-based preventive eHealth services: an acceptance model and survey study. *Journal of medical Internet research,* 19(12), e429.

Korkmaz Aslan, G., Kartal, A., Turan, T., Taşdemir Yiğitoğlu, G. & Kocakabak, C. (2021). Association of electronic health literacy with health-promoting behaviors in adolescents. *International Journal of Nursing Practice,* 27(2), e12921.

Koumakis, L., Kondylakis, H., Katehakis, D., Iatraki, G., Argyropaidas, P., Hatzimina, M. & Marias, K. (2017). *A content-aware analytics framework for open health data.* Paper presented at the International Conference on Biomedical and Health Informatics.

Lazuras, L. & Dokou, A. (2016). Mental health professionals' acceptance of online counseling. *Technology in Society,* 44, 10-14.

Lee, Y. Y., Le, L. K. D., Lal, A., Engel, L. & Mihalopoulos, C. (2021). The cost-effectiveness of delivering an e-health intervention, MoodGYM, to prevent anxiety disorders among Australian adolescents: A model-based economic evaluation. *Mental Health & Prevention,* 24, 200210.

Leung, L. & Chen, C. (2019). E-health/m-health adoption and lifestyle improvements: Exploring the roles of technology readiness, the expectation-confirmation model, and health-related information activities. *Telecommunications Policy,* 43(6), 563-575.

Lin, F.-R., Lu, I. Y. & Hsieh, P. S. (2011). Understanding the adoption of wireless sensor network service in households. Paper presented at the 2011 International Joint Conference on Service Sciences.

Mackert, M., Mabry-Flynn, A., Champlin, S., Donovan, E. E. & Pounders, K. (2016). Health literacy and health information technology adoption: the potential for a new digital divide. *Journal of medical Internet research,* 18(10), e264.

Magsamen-Conrad, K., Dillon, J. M., Billotte Verhoff, C. & Faulkner, S. L. (2019). Online health-information seeking among older populations: Family influences and the role of the medical professional. *Health communication,* 34(8), 859-871.

Maringer, M., van't Veer, P., Klepacz, N., Verain, M. C., Normann, A., Ekman, S. & Geelen, A. (2018). User-documented food consumption data from publicly available apps: an analysis of opportunities and challenges for nutrition research. *Nutrition Journal,* 17(1), 1-13.

Mattila, J., Koivumäki, J., Caldwell, D. G. & Semini, C. (2017). A survey on control of hydraulic robotic manipulators with projection to future trends. *iEeE/ASME Transactions on Mechatronics,* 22(2), 669-680.

Mehmood, Z., Ghani, A., Chen, G. & Alghamdi, A. S. (2019). Authentication and secure key management in E-Health services: A robust and efficient protocol using biometrics. *IEEE Access,* 7, 113385-113397.

Mitsutake, S., Shibata, A., Ishii, K. & Oka, K. (2016). Associations of eHealth literacy with health behavior among adult internet users. *Journal of medical Internet research,* 18(7), e192.

Mulyadi, S., Rahardjo, W. & Basuki, A. H. (2016). The role of parent-child relationship, self-esteem, academic self-efficacy to academic stress. *Procedia-Social and Behavioral Sciences,* 217, 603-608.

Murray, D. R. & Schaller, M. (2016). The behavioral immune system: Implications for social cognition, social interaction, and social influence *Advances in experimental social psychology*, 53, 75-129.

Nadri, H., Rahimi, B., Afshar, H. L., Samadbeik, M. & Garavand, A. (2018). Factors affecting acceptance of hospital information systems based on extended technology acceptance model: a case study in three paraclinical departments. *Applied clinical informatics,* 9(02), 238-247.

Nkosi, M. T. & Mekuria, F. (2010). Cloud computing for enhanced mobile health applications. Paper presented at the 2010 IEEE Second International Conference on Cloud Computing Technology and Science.

Pagliari, C., Sloan, D., Gregor, P., Sullivan, F., Detmer, D., Kahan, J. P. & MacGillivray, S. (2005). What is eHealth (4): a scoping exercise to map the field. *Journal of medical Internet research,* 7(1), e391.

Paige, S. R., Stellefson, M., Krieger, J. L., Anderson-Lewis, C., Cheong, J. & Stopka, C. (2018). Proposing a transactional model of eHealth literacy: concept analysis. *Journal of medical Internet research,* 20(10), e10175.

Park, H. H. & Sullivan, P. (2009). Market segmentation with respect to university students' clothing benefits sought: Shopping orientation, clothing attribute evaluation, and brand repatronage. International Journal of Retail & Distribution Management.

Pedersen, S., Grønhøj, A. & Thøgersen, J. (2015). Following family or friends. Social norms in adolescent healthy eating. *Appetite,* 86, 54-60.

Petty, R. E., Briñol, P. & Tormala, Z. L. (2002). Thought confidence as a determinant of persuasion: the self-validation hypothesis. *Journal of personality and social psychology,* 82(5), 722.

Pitchford, L. C., Alves, L. L., Bartschat, K., Biagi, S. F., Bordage, M. C., Bray, I. & Chachereau, A. (2017). Lxcat: An open-access, web-based platform for data needed for modeling low-temperature plasmas. *Plasma Processes and Polymers,* 14(1-2), 1600098.

Quaosar, G. A. A., Hoque, M. R. & Bao, Y. (2018). Investigating factors affecting elderly's intention to use m-health services: an empirical study. *Telemedicine and e-Health,* 24(4), 309-314.

Rahardjo, D., Lubis, D. P. & HARIJATI, İ. S. (2016). Internet Access and Usage in Improving Students' Self-Directed Learning in Indonesia Open University. *Turkish Online Journal of Distance Education,* 17(2).

Rahimi, B., Nadri, H., Afshar, H. L. & Timpka, T. (2018). A systematic review of the technology acceptance model in health informatics. *Applied clinical informatics,* 9(03), 604-634.

Raoof, R., Basheer, M. F., Shabbir, J., Ghulam Hassan, S. & Jabeen, S. (2021). Enterprise resource planning, entrepreneurial orientation, and the performance of SMEs in a South Asian economy: The mediating role of organizational excellence. *Cogent Business & Management,* 8(1), 1973236.

Saeed, N., Yang, Y. & Sinnappan, S. (2009). User acceptance of Second Life: An extended TAM with hedonic consumption behaviors.

Sharps, M. & Robinson, E. (2017). Perceived eating norms and children's eating behavior: An informational social influence account. *Appetite,* 113, 41-50.

Sumaedi, S. & Sumardjo, S. (2020). Factors influencing internet usage for health purposes. International Journal of Health Governance.

Sumaedi, S., Sumardjo, S., Saleh, A. & Syukri, A. F. (2021). A model of digital health communication media uses during the Covid-19 pandemic. Health Education.

Sun, J. & Tang, J. (2011). A survey of models and algorithms for social influence analysis Social network data analytics (pp. 177-214): Springer.

Sun, Y., Wang, N., Guo, X. & Peng, Z. (2013). Understanding the acceptance of mobile health services: a comparison and integration of alternative models. *Journal of electronic commerce research,* 14(2), 183.

Tennant, B., Stellefson, M., Dodd, V., Chaney, B., Chaney, D., Paige, S. & Alber, J. (2015). eHealth literacy and Web 2.0 health information seeking behaviors among baby boomers and older adults. *Journal of medical Internet research,* 17(3), e3992.

Vamos, C. A., Griner, S. B., Kirchharr, C., Green, S. M., DeBate, R., Daley, E. M. & Christiansen, S. (2019). The development of a theory-based eHealth app prototype to promote oral health during prenatal care visits. *Translational behavioral medicine,* 9(6), 1100-1111.

Van Deen, W. K., van der Meulen-de, A. E., Parekh, N. K., Kane, E. Z. A., DiNicola, C. A. & Ha, C. Y. (2016). Development and validation of an inflammatory bowel diseases monitoring index for use with mobile health technologies. *Clinical gastroenterology and hepatology,* 14(12), 1742-1750. e1747.

Van Deursen, A. J. & Helsper, E. J. (2015a). A nuanced understanding of Internet use and non-use among the elderly. *European journal of communication,* 30(2), 171-187.

Van Deursen, A. J. & Helsper, E. J. (2015b). The third-level digital divide: Who benefits most from being online? Communication and information technologies annual: Emerald Group Publishing Limited.

Van Deursen, A. J. & Van Dijk, J. A. (2019). The first-level digital divide shifts from inequalities in physical access to inequalities in material access. *New media & society,* 21(2), 354-375.

van Laar, E., van Deursen, A. J., van Dijk, J. A. & de Haan, J. (2019). Determinants of 21st-century digital skills: A large-scale survey among working professionals. *Computers in human behavior,* 100, 93-104.

van Zelst, C. M., Kasteleyn, M. J., van Noort, E. M., Rutten-van Molken, M. P., Braunstahl, G. J. & Chavannes, N. H. (2021). The impact of the involvement of a healthcare professional on the usage of an eHealth platform: a retrospective observational COPD study. *Respiratory Research,* 22(1), 1-8.

Varshney, H., Allahloh, A. S. & Sarfraz, M. (2019). IoT Based eHealth Management System Using Arduino and Google Cloud Firestore. Paper presented at the 2019 International Conference on Electrical, Electronics and Computer Engineering (UPCON).

Vázquez, A., Jenaro, C., Flores, N., Bagnato, M. J., Pérez, M. C. & Cruz, M. (2018). E-health interventions for adult and aging population with intellectual disability: a review. *Frontiers in psychology,* 9, 2323.

Venkatesh, V., Thong, J. Y. & Xu, X. (2012). Consumer acceptance and use of information technology: extending the unified theory of acceptance and use of technology. Mis Quarterly, 157-178.

Walsh, L., Hemsley, B., Allan, M., Adams, N., Balandin, S., Georgiou, A. & Hill, S. (2017). The e-health literacy demands of Australia's my health record: a heuristic evaluation of usability. Perspectives in health information management, 14(Fall).

Wong, Y. (2018). The New Chinese e-Health Revolution; Healthcare Bus. Int.: London, UK.

Yan, R., Basheer, M. F., Irfan, M. & Rana, T. N. (2020). Role of Psychological Factors in Employee Well-being and Employee Performance: An Empirical Evidence from Pakistan. *Revista Argentina de Clínica Psicológica,* 29(5), 638.

Yarbrough, A. K. & Smith, T. B. (2007). Technology acceptance among physicians: a new take on TAM. *Medical Care Research and Review,* 64(6), 650-672.

Yu, K., Tan, L., Lin, L., Cheng, X., Yi, Z. & Sato, T. (2021). Deep-learning-empowered breast cancer auxiliary diagnosis for 5GB remote E-health. *IEEE Wireless Communications,* 28(3), 54-61.

Yuan, S., Ma, W., Kanthawala, S. & Peng, W. (2015). Keep using my health apps: Discover users' perception of health and fitness apps with the UTAUT2 model. *Telemedicine and e-Health,* 21(9), 735-741.

Zhao, X., Yang, B. & Wong, C. W. (2018). Analyzing trend for US immigrants' e-Health engagement from 2008 to 2013. Health communication.

Zimmerman, M. S. & Shaw Jr, G. (2020). Health information-seeking behavior: a concept analysis. *Health Information & Libraries Journal,* 37(3), 173-191.