Vol. 14 No. 2 ISSN 2220-3796

Editorial

Information Management and Business Review (IMBR) provides a unique platform for scholars around the world to share their knowledge and publish research work in the fields of information management, business, management and related disciplines. The work submitted for publication consideration in IMBR should address empirical and theoretical developments in the subjects related to the scope of the journal in particular and allied theories and practices in general. Scope of IMBR includes: subjects of finance, accounting, auditing, cost & management accounting, financial psychology, financial literacy, marketing, information management, human resource management, knowledge management, innovation, change management, enterprise management, e-commerce and information system. Author(s) should declare that work submitted to the journal is original, not under consideration for publication by another journal and that all listed authors approve its submission to IMBR. It is IMBR policy to welcome submissions for consideration, which are original, and not under consideration for publication by another journal at the same time. Author (s) can submit: Research Paper, Conceptual Paper, Case Studies and Book Review. The current issue of IMBR comprises papers of scholars from Indonesia, India and Taiwan. The Effect of Internal Factors on Performance Measurement, A Study on the Relationship between Technostress and Employee Creativity with Perceived Organizational Support, The Quality of Investigation Audit Influenced by Independence and Integrity and Key Factors to Increasing Free Cash Flow for Manufacturers Utilizing Lean Production are some of the major practices and concepts examined in these studies. Journal received research submission related to all aspects of major themes and tracks. All the submitted papers were first assessed by the editorial team for relevance and originality of the work and blindly peer-reviewed by the external reviewers depending on the subject matter of the paper. After the rigorous peer-review process, the submitted papers were selected based on originality, significance, and clarity of the purpose. The current issue will therefore be a unique offer, where scholars will be able to appreciate the latest results in their field of expertise, and to acquire additional knowledge in other relevant fields.

Editor In Chief

Ijaz Ur Rehman PhD

Editorial Board

- Lew Tek Yew PhD, Curtin University Sarawak, Malaysia
- Mohammad Kazemi Reza PhD, University of Tehran, Iran
- Chandana Prasad Withana PhD, Charles Sturt University, Sydney, Australia
- KOH Noi Keng PhD, National Institute of Education, Nanyang Technological University, Singapore
- Boubker Sbihi PhD, I-school ESI, Rabat, Morocco
- Ayhan Kapusuzoglu PhD, Yildirim Beyazit University, Turkey
- Sameer Babu M PhD, University of Kerala, India
- Dong Hwa Kim PhD, Hanbat National University, Daejeon, Republic of Korea
- Teodoro A. Macaraeg Jr PhD, University of Caloocan City, Manila, Philippines
- Benedict Valentine Arulanandam PhD, University Putra Malaysia, Malaysia
- Yousef Daradkeh PhD, Prince Sattam bin Abdulaziz University, KSA
- Ari Warokka PhD, University Utara Malaysia, Malaysia

TABLE OF CONTENTS

Description	Pages
Title	I
Editorial	II
Editorial Board	III
Table of Contents	IV
Papers	V
The Effect of Internal Factors on Performance Measurement in Indonesian Local Government Siti Nur Kholishoh, Khoirul Aswar	1
A Study on the Relationship between Technostress and Employee Creativity with Perceived Organizational Support Raunak Mishra	9
The Quality of Investigation Audit Influenced by Independence and Integrity Mahendro Sumardjo, Najmatuzzahrah, Khoirul Aswar	15
Key Factors to Increasing Free Cash Flow for Manufacturers Utilizing Lean Production: An AHP-DEMATEL Approach Cathay Kuo-Tai Kang, Chieh-Yu Lin & Yi-Hui Ho	28

PAPERS

Information Management and Business Review (IMBR)
Vol. 14, No. 2, June 2022 (ISSN 2220-3796)

The Effect of Internal Factors on Performance Measurement in Indonesian Local Government

Siti Nur Kholishoh & Khoirul Aswar*
Universitas Pembangunan Nasional Veteran Jakarta, Indonesia
khoirulaswar@upnvj.ac.id

Abstract: This study is motivated by the many problems found in performance measurement, especially in district/city governments in Indonesia. This study aims to examine the influence of internal factors, namely the participation of internal stakeholders, internal political support, and the organizational capacity of local government on performance measurement. The data for this study was gathered via a Google form, with 43 questionnaires addressed to the secretary and head of Serang City's program, evaluation, and reporting subdivision. Purposive sampling was used in this investigation, which took a quantitative approach. Structural Equation Modeling (SEM) with Smart Partial Least Square version 3.0 was used as an analytical technique. The results of this study indicate that internal stakeholder participation and the organizational capacity of local government have no significant effect on performance measurement. Internal political support has a significant effect on performance measurement. Meanwhile, the results of this study have several implications for local governments, especially district/city governments, namely as an evaluation material related to performance measurement at the district/city government level as well as providing information for the State Civil Apparatus (ASN) involved in Government Agency Performance Accountability Reports (LAKIP) to always improve their skills in measuring performance and paying attention to the outcomes to be achieved.

Keywords: *Performance measurement, institutional theory, internal stakeholder participation, internal political support, organizational capacity, LAKIP.*

1. Introduction

The implementation of New Public Management (NPM) in Indonesia has consequences for bureaucratic reform. The orientation of bureaucratic reform encourages to create a government that is run by referring to results or result-oriented government. Not only that bureaucratic reform is also motivated by the desire to create a government order that is free from corruption. For this reason, several institutional instruments are needed to support the implementation of bureaucratic reform. The institutional instrument in question is the measurement of organizational performance. In Presidential Regulation No.29 of 2014 concerning the Performance Accountability System for Government Agencies, it is stated that in an effort to support good performance measurement, the central government as the regional supervisor has created a performance accountability system for government agencies (SAKIP). This refers to the mandate conveyed in Presidential Instruction No. 7 of 1999 concerning the obligation for all government officials to account for their main duties and functions. The idea came from an awareness of the larger government organizational structure, accompanied by increasingly complex public needs. In 2019, referring to Government Regulation No. 8/2006 concerning Financial Reporting and Performance of Government Agencies and Presidential Regulation No. 19/2014 regarding SAKIP, Kemenpan-RB (2019) has evaluated and provided assistance on SAKIP to 84 Ministries/Agencies, 34 provincial governments, and 514 district/city governments.

From the evaluation, it is known for regencies/cities as many as 57.28% or around 294 regencies/cities have received the predicate value of B or higher. The large number of regencies/cities that get scores below the minimum score (<60) is a special concern for the government. Of the 220 regencies/cities that still do not meet the specified minimum value (B), one of them is the Serang City Government. The reason is, from a total of 8 regencies/cities in Banten Province, only the city of Serang received a SAKIP score below the minimum score, namely B. Studies on performance measurement have been carried out by several researchers including Julnes and Holzer (2001) which states that stakeholder participation and organizational capacity are strong factors in the performance measurement system. In addition, political support will be able to help organizations to obtain external resources and administrative continuity, so that it will improve performance measurement (Abane & Brenya, 2021; Yang & Hsieh, 2007). Furthermore, there are still many problems in measuring performance. As stated by Kemenpan-RB (2019) which sees that there are still many ASN who have not been able to compile and make LAKIP, hence the study on performance measurement needs to be

carried out in Indonesian local governments involving internal stakeholder participation, internal political support, and organizational capacity of local government.

2. Literature Review and Hypothesis Development

Institutional Theory: Institutional theory is formed based on social and cultural values that surround an organization. Based on data reported from the Banten Provincial General Bureau, the evaluation results of SAKIP obtained by Serang City are the worst among other districts/city governments in Banten Province. DiMaggio and Powell (1983) suggest that organizations are shaped by the institutional environment that surrounds them. Therefore, an isomorphism is formed. Isomorphism or isomorphic is a situation where if an organization is in the same environment, then the organizational form will be the same as well. DiMaggio and Powell (1983), view that the isomorphic institutional form is divided into three parts. First, coercive isomorphic which shows that organizations adopt other organizations because of pressures from the state and other organizations. Second, mimetic isomorphic is the imitation of an organization by another organization. This can happen when an organization is faced with environmental uncertainty, the organization will tend to imitate. Third, normative isomorphic, which is a situation that arises because of professional demands (1983).

Performance Measurement: Organizations in the public sector focus on providing services to the community. The public sector was originally created because of the community's needs that must be met for goods and services. Public sector organizations have become the center of public attention, so performance measurement is very necessary to measure the level of success of public organizations in fulfilling their mission to provide public goods and services. Performance measurement can be measured in two ways, namely by adoption and implementation. Adoption relates to the acceptance of the concept of performance measurement and its policies. While implementation leads to the integration of operating activities into organizational performance (van Dooren, 2005). The essence of performance measurement carried out in the public sector is the implementation of the concept of value for money (VFM). The VFM concept itself has three components, namely economic, efficient, and effective (Halim & Kusufi, 2014). Where to be able to measure this, every government organization must know the level of input, output, and outcome. In responding to the evaluation of performance measurement that occurs in district/city governments, a performance indicator is needed.

Kloot (1999) reveals that performance measurement indicators are used to measure the level of targets achieved, community satisfaction, service performance, and differences between institutions. Robertson (2002) suggests that performance measurement is a way to be able to evaluate job increases that aim to achieve a set goal. To measure the success of performance measurement is not an easy thing (Halim & Kusufi, 2014). This is because the measurement of organizational performance is influenced by many factors. One of the factors that influence performance measurement is internal factors. Internal factors that may be related to performance measurement are internal stakeholder participation, internal political support, and organizational capacity. Julnes and Holzer (2001) say that resources have a strong impact on the adoption and implementation of utilization processes. This gives rise to the interpretation that the resource in question is one of the internal stakeholders. According to Epstein et al. (2005), GAO (2004), Ho and Coates (2004) say that internal stakeholders have a role in designing and implementing PMS, setting goals, indicators, and targets. Along with the times, the implementation of performance measurement in Indonesia.

Requires a shift in terms of operations, structure, and personnel to corporate culture (Fernandez & Rainey, 2006; Putri et al., 2020). Changes that occur will affect the effectiveness of performance measures. Therefore, political support is needed that will help the institution or organization to gain external resources, autonomy, authority, stability, and administrative continuity (Meier, 2000; Riccucci, 1995; Wolf, 1993). As for creating a good performance, it is necessary to pay attention to organizational capacity to increase effectiveness, efficiency, and responsiveness in government performance. Milen (2006) states that organizational capacity is defined as the ability, skills, understanding, attitudes, values, relationships, behaviors, motivations, resources and conditions that enable each individual or organization to carry out its functions and achieve the goals that have been set. In Indonesia, the implementation of performance measurement in bureaucratic reform is considered important to maintain consistency and continuity of reform, because it is hoped that the

performance measurement will be able to describe information on the achievement of organizational performance which will later become the basis for becoming better (Suwatin, 2009).

Hypothesis Development

Participation of Internal Stakeholders and Performance Measurement: In the previous literature, several studies have discussed related to stakeholder participation in performance measurement. As is the case with Yang and Hsieh (2007) conducted on local government officials in Taiwan, amounting to 684 respondents. The findings of this study concluded that stakeholder participation has a significant positive effect on performance measurement. This means that the better the participation of stakeholders, the better the performance measurement will be. According to Epstein et al. (2005); GAO (2004); Ho and Coates (2004), stakeholders should be involved in designing and implementing PMS and setting organizational goals, indicators and objectives. In its development, an organization tends to find problems when compiling performance indicators (Behn, 2002).

Cavaluzzo and Ittner (2004) support this assumption by saying that there are factors that hinder the successful implementation of a performance measurement system, one of which is the difficulty of determining performance measures. Based on this uncertainty, many organizations end up imitating performance indicators from other organizations that have developed (Sofyani & Akbar, 2013). This imitation process is one part of institutional theory, namely mimetic isomorphic. In addition to determining performance indicators, internal stakeholders also play a role in determining strategies to achieve organizational goals. Yang and Hsieh (2007) suggest that stakeholder participation affects the formulation of performance measurement results. This is in line with Julnes and Holzer (2001) who mentioned that the participation of internal stakeholders improves PMS.

H_1: Participation of internal stakeholders has a positive effect on performance measurement.

Internal Political and Performance Measurement: Political support is needed by an organization or institution so that when there is a transition in terms of operations, structure, personnel, to corporate culture Fernandez and Rainey (2006) in the process of implementing performance measurement in Indonesia, the organization will still obtain resources, autonomy, authority, stability, and continuity of administration (Meier, 2000). Yang and Hsieh (2007) describe that internal political support can also be referred to as organizational support. Yang (2009) also defines internal political support by using the term internal politics. Furthermore, Abane and Brenya (2021) analyzed the relationship between performance measurement and political support. The analysis uses data from 850 middle and senior managers of local government in Ghana. It is found that there is a strong influence between political support variables on performance measurement.

Abane and Brenya (2021) assert that political support is related to the authority and autonomy given to the organization, this authority and autonomy are related to measuring the performance of an organization. This assumption is supported by the statements of Julnes and Holzer (2001) and Behn (2002) which state that political factors influence the implementation of organizational performance measures. Organizational politics emerges from a lack of consensus among the entities inside the organization that has the potential to produce conflict (Morrow & Hitt, 2000). Failure to reach an agreement within the organization is caused by pressure from those in power. This pressure arises because the performance measurement has not been maximized. The pressure received to adopt a change in the organization is referred to as coercive isomorphic.

H_2: Internal political support has a positive effect on performance measurement.

Organizational Capacity and Performance Measurement: Capacity is defined as the ability, absorption, or capacity of the organization. Organizational capacity is defined as the organization's ability to achieve its goals. Milen (2006) states that organizational capacity is the ability, skills, understanding, attitudes, values, relationships, behavior, motivation, resources and conditions that enable each individual or organization to carry out its functions and achieve the goals that have been set. In Akbar et al. (2012) said that organizational capacity is also known as resources. This organizational capacity or resource capacity has been widely studied before. As well as research by Wang and Berman (2001) which measures organizational capacity

with indicators of management information systems, cost-based accounting systems, competent staff and a budget surplus. Furthermore, Akbar et al. (2012) adopted the research of Wang and Berman (2001) with indicators of management information systems, competent staff, performance-based budgeting and a budget surplus.

As for the research of Aswar et al. (2020) which adopted the research of Akbar et al. (2012) with resource indicators (people, time, people), staff for evaluation, evaluation department, collection of reliable and relevant data, and performance benchmarks. Aswar et al. (2020) studied the relationship between organizational capacity and performance measurement in Bekasi City. It was concluded that organizational capacity/resources variables had a significant influence on performance measurement. As for Mahmudi (2005) said that determining the level of effectiveness and accuracy of the implementation of a performance measure depends on the availability of sources. As for van Dooren (2005) said that the lack of resources will cause problems in measuring organizational performance. To ensure that the available resources are sufficient, it is required to improve quality and be professional. This demand to be a professional is included in the isomorphic normative.

H_3: Organizational capacity of local government has a positive effect on performance measurement.

3. Research Methodology

This study uses primary data obtained directly related to the variables that are the focus of the research. The data received is the result of distributing questionnaires to respondents. The population in this study were all ASN in the Regional Apparatus Organization (OPD) of the Serang City who were involved in LAKIP, namely the Secretary and Head of the Program, Evaluation, and Reporting Subdivision totaling 63 ASN. The number consists of 32 ASN serving as Secretary and 31 ASN serving as Head of the Program, Evaluation and Reporting Subdivision. The sampling method was carried out by the saturated sample/census method, which means that the entire population contained in the study was used as a sample. This study used the Structural Equation Model-Partial Least Square (SEM-PLS) approach to test data analysis using the Smart PLS 3.0 tool. The measurement used is a Likert scale point 5, in which the statement indicators of each variable are adopted from previous studies, such as:

Table 1: Variable Measurement

Variable	Indicator	Sources
Performance Measurement	Input, output, outcome and operation efficiency	Aswar et al. (2020), Damayanti & Aswar (2021)
Participation of internal stakeholders	participate in planning, opportunity, involve, understand performance measurement systems	Abane dan Brenya (2021)
Internal political support	low level of autonomy, given high authority, supports the implementation of performance management	Abane dan Brenya (2021)
Organizational capacity	Resources, allocate tasks, have a department in charge, reliable and relevant data, benchmark	Aswar et al. (2020)

4. Results and Discussion

In this study, the population used was 63 ASN, consisting of 32 ASN who had the position of Secretary and 31 ASN who had the position of Head of the Program, Evaluation, and Reporting Subdivision (PEP) in all Regional Apparatus Organizations (OPD) Serang City. The distributed questionnaires by directly visiting OPD-OPD in Serang City and distributing questionnaires in Serang City OPD meetings at the Forbis Horizon Hotel, Cilegon. A total of 43 questionnaires have been returned. After obtaining the necessary data, the authors conducted statistical analysis tests and obtained the following results:

Table 2: Descriptive Statistics Results

	Indicator	Mean	Std. Deviation
Performance Measurement	4	4,378	0,532
Participation of internal stakeholders	4	4,285	0,546
Internal political support	3	4,333	0,617
Organizational capacity	5	4,172	0,699

The results of the descriptive statistical data processing above illustrate that in this study no significant differences were found given by the respondents in the answers to the filled-out questionnaires. It can be seen from the overall standard deviation value which is smaller than the mean value. If the value of the standard deviation obtained is getting smaller, it means that the level of homogeneity of the data is quite high. After performing the statistical analysis test, the test was continued by using the Smart PLS 3.0 test tool. The tests carried out are testing the measurement model (outer model) and structural model (inner model). The measurement model (outer model) is used to test the validity of a variable or its construct. While the structural model (inner model) finds out how much the exogenous variable (X) affects the endogenous variable (Y). The following are the results of testing the structural model (inner model) with R-Square:

Table 3: Adjusted R-Square

	R-Square Adjusted
Performance Measurement	0,621

From the table above, it is concluded that the exogenous variable (X) which consists of internal stakeholder participation, internal political support, and organizational capacity of local government affects the endogenous variable (Y) namely performance measurement by 62.1%. While the rest is influenced by factors outside of this research. Furthermore, testing is continued by testing the hypothesis. Here are the results obtained:

Table 4: Hypothesis Test Results

	Path Coefficient	T-Statistics (|O/STDEV|)	P Value
Participation of internal stakeholders	0,237	1,838	0,044
Internal political support	0,851	5,560	0,000
Organizational capacity	-0,296	1,817	0,0058

Based on table 4 shows the coefficient value of Internal Stakeholder Participation is 0.237. This means that there is a positive relationship between internal stakeholder participation and performance measurement. Meanwhile, based on the results of the statistical t-test, the results were 1.838 with a significance level of 0.044. This means that internal stakeholder participation has no significant effect on performance measurement because the value of t statistic < value of t table (1.96) so H1 is rejected. The results of this study contradict Yang and Hsieh (2007) who found that stakeholder participation has a significant effect on the effectiveness of performance measurement. This hypothesis was rejected because the ASN involved in LAKIP did not participate in totality. This assumption is supported by the results of the mean value of indicators related to internal stakeholders' understanding of the Performance Measurement System (PMS) which is still low. That is, it is indicated that ASN involved in LAKIP tend to have less understanding of the performance measurement system. This understanding of PMS should be the basis of the performance measurement that is carried out. This lack of understanding can become an obstacle to participation in performance measurement in Serang City and will result in a participation that is not total. If the participation carried out by ASN is getting better and in totality, the resulting performance measurement will also be better. Furthermore, internal political support got a coefficient value of 0.851 with a t statistic value of 5.560, which means the t statistic value > t table (1.96).

This means that there is a positive and significant relationship between internal political support and performance measurement. H2 is accepted. If the performance measurement is supported by a lot of internal

political support, it will result in better performance measurement. This study has results that are in line with Abane and Brenya (2021) which reveals that political support has a significant impact on local government in Ghana. Finally, the organizational capacity of local government obtained a coefficient value of -0.296 with a t statistic of 1.817 and a significance of 0.0058. That is, there is a negative and insignificant relationship between the organizational capacity of local government and performance measurement. H3 is rejected. The reason is that it is assumed that ASN has not been able to optimally allocate existing resources. This indication refers to the mean result which is still low on the indicators used in the organizational capacity of local government variable, namely that OPD has allocated staff tasks to be used as performance evaluation materials. This means that the organization is still not able to allocate its resources properly. This inability occurs because there are still many ASNs who have not received LAKIP training (based on the demographics of ASNs who have received LAKIP training). This result contradicts Aswar et al. (2020) who showed that organizational capacity/resources had a favorable effect on performance measurement in Bekasi City Regional Apparatus Organizations (OPD).

5. Conclusion and Recommendations

The purpose of this study is to examine the internal factors, namely internal stakeholder participation, internal political support, and organizational capacity of local government on performance measurement. The current study findings provided empirical evidence that the participation of internal stakeholders has no significant effect on performance measurement. Internal stakeholders in the Serang City OPD have not been carried out in totality due to a large number of State Civil Apparatuses (ASN) who do not understand the performance measurement system, therefore making performance measurement in the Serang City Government not good. Internal political support has a positive and significant influence on performance measurement. In other words, the more adequate the internal support received, the better the performance measurement will be. Meanwhile, the organizational capacity of local government has no significant effect on performance measurement. That is, the availability of resources in the organization if it is not accompanied by the ability to allocate these resources, it will not make performance measurement good.

In this case, the organizational capacity in Serang City OPD has not been utilized properly due to a lack of training in allocating staff tasks so the performance measurement that results is not optimal. Given the importance of performance measurement in bureaucratic reform, the authors suggest for ASN involved in LAKIP always improve their expertise in performance measurement, preparation of LAKIP and further deepen and pay attention to the outcomes to be achieved. This is intended to create a results-oriented government. The recommendations are based on the things contained in Law No. 17 of 2003 on State Finance, Law No. 1 of 2004 on State Treasury, and Law No. 15 of 2004 on Auditing the Management and Accountability of State Finances. There are several limitations experienced during the research process. As it is known that this study was conducted at a time when Indonesia was hit by a pandemic. This causes data collection on respondents to be limited. This unstable situation was accompanied by a deadline for reporting on accountability carried out by the OPDs in Serang City which made it difficult to meet directly with the State Civil Apparatus (ASN) involved with LAKIP.

References

Abane, J. A. & Brenya, E. (2021). The Relationship between Organizational Environment Antecedents and Performance Management in Local Government: Evidence from Ghana. *Future Business Journal*, 7(1). https://doi.org/10.1186/s43093-020-00049-2.

Akbar, R., Pilcher, R. & Perrin, B. (2012). Performance Measurement in Indonesia: The Case of Local Government. *Pacific Accounting Review,* 24(3), 262-291. https://doi.org/10.1108/01140581211283878

Aswar, K., Lovina & Ermawati. (2020). The Effect of Organizational Factors on Performance Measurement in Indonesia Local Governments. *International Journal of Economic and Business Administration,* 8(4), 122-131. https://doi.org/10.35808/ijeba/574

Behn, R. D. (2002). The Psychological Barriers to Performance Management. *Public Performance and Management Review,* 26(1), 5-24. https://doi.org/10.1080/15309576.2002.11643684

Biro Umum Provinsi Banten. (2020). Enam Daerah Naik Kelas Terima SAKIP Award 2019. Retrieved from https://biroumum.bantenprov.go.id/post/enam-daerah-naik-kelas-terima-sakip-award-2019 (accessed: May 10, 2021)

Damayanti, V. & Aswar, K. (2021). Performance Measurement in Local Government: An Analysis of Organizational Factors. *Information Management and Business Review*, 2(1), 35-42.

DiMaggio, P. J. & Powell, W. W. (1983). The Iron Cage Revisited: Institutional Isomorphism and Collective Rationality in Organizational Fields. *American Sociological Review,* 48, 147-160. https://doi.org/10.2307/2095101

Dooren, W. V. (2005). What Makes Organizations Measure? Hypotheses on the Causes and Conditions for Performance Measurement. *Financial Accountability and Management,* 21(3), 363-383. https://doi.org/10.1111/j.0267-4424.2005.00225.x

Epstein, P. D., Coates, P. M., Wray, L. D. & Swain, D. (2005). Results That Matter: Improving Communities by Engaging Citizens, Measuring Performance, and Getting Things Done. San Francisco: Jossey-Bass.

Fernandez, S. & Rainey, H. G. (2006). Managing Successful Organizational Change in the Public Sector. *Public Administration Review,* 66(2), 168-176. https://doi.org/10.1111/j.1540-6210.2006.00570.x

Halim, A. & Kusufi, M. S. (2014). Teori, Konsep, dan Aplikasi Akuntansi Sektor Publik. Jakarta: Salemba Empat.

Ho, A. & Coates, P. (2004). Citizen Initiated Performance Assessment: The Initial Iowa Experience. *Public Performance and Management Review,* 27(3), 29-50. Retrieved from https://www.jstor.org/stable/3381144

Julnes, P. D. L. & Holzer, M. (2001). Promoting the Utilization of Performance Measures in Public Organizations: An Empirical Study of Factors Affecting Adoption and Implementation. *Public Administration Review,* 61(6), 693-708. https://doi.org/10.1111/0033-3352.00140

Kemenpan, R. B. (2019). Laporan Kinerja Kementerian Pendayagunaan Aparatur Negara dan Reformasi Birokrasi Tahun 2019.

Kloot, L. (1999). Performance Measurement and Accountability in Victorian Local Government. *International Journal of Public Sector Management,* 12(7), 565-584. https://doi.org/10.1108/09513559910308039

Mahmudi. (2005). Manajemen Kinerja Sektor Publik. Yogyakarta: UPP AMP YKPN.

Meier, K. J. (2000). Politics and the Bureaucracy: Policymaking in the Fourth Branch of Government. New York: Harcourt College.

Milen, A. (2006). What Do We Know About Capacity Building? An Overview of Existing Knowledge and Good Practice. Geneva: Department of Health Service Provision.

Morrow, J. L. & Hitt, M. A. (2000). Rational and Political Models of Strategic Decision Making: Understanding the Role of Firm Performance and Stakeholder Political Pressure. Handbook of Strategic Management, 165-179.

Pemerintah Kabupaten Belitung Timur. (2017). ASN Penyusun LAKIP Harus Mampu Susun LAKIP dengan Benar. Retrieved from https://www.belitungtimurkab.go.id/?p=6747 (accessed: May 7, 2021)

Putri, L. E., Aswar, K. & Ermawati, E. (2020). Performance Measurement of Local Government in Indonesia: A Conceptual Study, *Information Management and Business Review*, 12(1), 41-44.

Riccucci, N. M. (1995). Unsung Heroes: Federal Execucrats Making a Difference. Washington: Georgetown University Press.

Robertson, G. (2002). Lokakarya Review Kinerja. BPKP, Yogyakarta.

Sofyani, H. & Akbar, R. (2013). Hubungan Faktor Internal Institusi dan Implementasi Sistem Akuntabilitas Kinerja Instansi Pemerintah (SAKIP) di Pemerintah Daerah. *Jurnal Akuntansi dan Keuangan Indonesia,* 10(2), 184-205. https://doi.org/10.21002/jaki.2013.10

Suwatin. (2009). Indikator Kinerja dan Reformasi Birokrasi: Tinjauan terhadap Indikator Kinerja dalam Instrumen Pengukuran Kinerja Organisasi Pemerintah. Pusat Kajian Kinerja Kelembagaan LAN RI, 1-12. https://doi.org/10.24258/jba.v6i2.58

U. S. Government Accountability Office (GAO). (2004). Result-Oriented Government: GPRA has established a Solid Foundation for Achieving Greater Results. Washington: Government Printing Office.

Van Dooren, W. (2005). What makes organizations measure? Hypotheses on the causes and conditions for performance measurement. *Financial Accountability & Management,* 21(3). 363-383. https://doi.org/10.1111/j.0267-4424.2005.00225.x

Wang, X. & Berman, E. (2001). Hypotheses about Performance Measurement in Countries: Findings from a Survey. *Journal of Public Administration Research and Theory,* 11(3), 403-428. https://doi.org/10.1093/oxfordjournals.jpart.a003508.

Wolf, P. J. (1993). A Case Survey of Bureaucratic Effectiveness in U.S. Cabinet Agencies: Preliminary Result. *Journal of Public Administration Research and Theory,* 3(2), 161-181. https://doi.org/10.1093/oxfordjournals.jpart.a037165

Yang, K. (2009). Examining Perceived Honest Performance Reporting by Public Organizations: Bureaucratic Politics and Organizational Practice. *Journal of Public Administration Research and Theory,* 19(1), 81-105. https://doi.org/10.1093/jopart/mum042.

Yang, K. & Hsieh, J. Y. (2007). Managerial Effectiveness of Government Performance Measurement: Testing a Middle-Range Model. *Public Administration Review,* 67(5), 861-879. https://doi.org/10.1111/j.1540-6210.2007.00774.x

Information Management and Business Review (IMBR)
Vol. 14, No. 2, June 2022 (ISSN 2220-3796)

A Study on the Relationship between Technostress and Employee Creativity with Perceived Organizational Support

Raunak Mishra
Indian Institute of Management, Kozhikode, India
raunakm12fpm@iimk.ac.in

Abstract: Employee creativity is important to all kinds of organizations whether they're small or large whether they're for-profit or not-for-profit it doesn't matter. There has been a lot of research done in the past on employee creativity to assess how significant it is. This research has been done not just from the perspective of the organization, but also from the perspective of the employee's work happiness and job performance. In this essay, we made an effort to investigate the influence that technostress now exists in the organization has on employee creativity and how it will continue to do so in the future. We tried to foresee the result by focusing on the link between the two to indicate its future consequences and explain how it would be beneficial to both the organization and the individual. This was accomplished by highlighting the connection between the two.

Keywords: *Employee creativity, technostress, perceived organizational support.*

1. Introduction

Employee creativity is considered the ability to generate a unique or novel idea that is useful for the organization in making the process more efficient and helpful. It is to be taken into consideration that creativity is examined through goal orientation (Oldham & Cummings, 1996). The inclination of employees towards creating anything novel for the organization is basically the result of an internal factor. Employees are determined by their aspiration to perform in such a way. These aspirations come because of the motivation that they have in themselves, and not because they want to receive any external reward (Nohria, Groysberg, & Lee, 2008). Also, there are examples of external factors where the organization motivates the employees to come up and show their out-of-the-box thinking so that they can compete with the other companies' products and be appreciated by the management. These external factors which are influencing the employee's creativity can be divided into active and passive perspectives, like those who seek to attain favorable judgments and those who avoid unfavorable judgments, respectively.

Furthermore, there has been a lot of empirical work done in the organizational behavior psychology literature, and it is surprising to know that salary bonuses and rewards for creative work are actually not very effective at motivating creative work. So, salary is probably important to give to employees for reasons having to do with stressing creativity, but specifically in terms of motivating creative work through financial bonuses. Creativity brings togetherness among the employees to work in the same environment with each other. Many times, they discussed the idea with their subordinates to take the advice so that if something is missing that can be fulfilled; it's a kind of direct feedback that they are getting (Zhao & Rosson, 2007). These creative processes and thinking in the organization help in building alliances with the teammates at the workplace. Team bonding in an organization also helps the general commitment among representatives. Communications are almost certain among collaborators, even those individuals who don't cooperate consistently. An expanded degree of solace in a group is a positive for any association.

By building up a situation where innovative personalities are welcome, organizations can draw in increasingly gifted experts. They can fill positions all the more viably and proficiently. Apart from this, there is another set of researchers who have worked on employee creativity and stress. In the article (Hon, 2013), he studied how the requirement for creativity improves service performance with the help of a multilevel analysis study of the stress in the working environment. According to Naseem (1984), who tried to study the mediating role of emotional intelligence between job stress and employee creativity. Motivated by the challenges and the gaps in the literature in the abovementioned studies, the IS researchers need to find out whether there is an impact of technostress on employee creativity. Also, we have looked into perceived organizational support by the organization literature and how it's going to influence the relationship between

the technostress and employee creativity in this relationship. Acknowledge the above-mentioned studies and literature on employee creativity and technostress.

We aim to address the key research questions (RQ) that this study aims to address:
RQ: *How does technostress is going to impact employee creativity in the organization in the presence of perceived organizational support?* This article is organized in the following way: the next section is going to be the theoretical background where we will describe the technostress and employee creativity relationship and talk about the exciting literature. We will also discuss perceived organizational support and its impact on the relationship between technology and employee creativity. After that, we will move towards the research model and hypothesis development section, and then, subsequently, we will talk about the implications and future prospects of this research work in the discussion and conclusion section.

2. Theoretical Background

In this paper, we attempted to collect literature from 1993 to 2016 on employee creativity, organizational stress, and perceived organizational support for employees. For reviewing the article, the main purpose was to collect the literature, and the following libraries were searched for studies related to employee creativity, technostress, and perceived organizational support. Mostly useful and apposite online published papers and cited books are considered from EBSCO Host Database, JSTOR Database, SAGE Database, and Google Scholar using a number of keywords including creativity, employee creativity, organizational creativity, creative behavior, and creativity and innovation. The main keywords used during the search were employee creativity, creativity in the organization, technostress in the organization, perceived organizational support, and creative innovation. The abstracts of 248 journal articles were reviewed and, based on the relevance of the articles to the main topic, 48 articles were selected for in-depth study. A comparable impact happens with current workers, who are bound to remain on board in light of the innovative condition. They become content with their activity and focus on staying with the organization for the long haul.

Positively, the most significant part of creativity is the manner in which it influences the work (Karkoszka & Honorowicz, 2009). With the capacity to think imaginatively and fresh, workers are bound to concoct novel and inventive answers to the deterrents they experience. This excitement to take care of issues can prompt better approaches to achieve assignments and run the association all the more viably. In many past organizational behavior studies, they mentioned the benefit of a creative workplace. Also, in some of the literature, it is explicitly mentioned that companies that provide a creative environment for the employee help the employee to provide psychological distance from their problems during work (Rothaus, Morton, & Hanson, 1965). This wonder explains why it's simpler to offer companions guidance than take care of your issues; the issue isn't happening in the present and influencing you. Additionally, a study found that expanding spatial separation among people and issues helps inventiveness and efficiency. Since creative work environments allow employees to look at bigger problems, they experience more mental separation and can think of more creative solutions. Starting with (Woodman, Sawayer, & Griffin, 1993) they suggested the interactional model where they talked about the creative process, creative product, person, and situation and then integrated these constructs with the others.

In their article, they talked about the conceptual model of the contextual factor and how this is going to affect employee creativity directly. In their model, they connected social capital to intrinsic motivation, knowledge, and then employee creativity (Chen & Kaufmann, 2008) (Simonton, 1984) discuss how social psychology creativity and social interaction influence creativity. According to (Greg, Douglas, Schmidt, Lavender & Peers, 1996), there are three characteristics of the organizational context that are: job complexity, supportive supervision, and controlling supervision, and with the help of these, they examined the independent and joint contribution of employee creativity. (Zhang and Bartol, 2010) tried to understand the creative process engagement with the help of the leadership, empowerment, and creativity theories, to provide a link between how leader encouragement of creativity moderated the connection between psychological empowerment. Also, we looked at the perceived organizational support (POS), which, according to (Eisenberger and Huntington, 1986), is the degree to which an employee thinks that his or her employer or company cares about him or her and what he or she brings to the company. There's a fine balance between the two costly or poorly planned POS (Akgunduz, Alkan, & Gök, 2018).

3. Research Model and Hypothesis Development

Management researchers are always interested in the study of how to work in the organization is associated with stress and this can be seen in the literature too (Cavanaugh, Boswell, Roehling, & Boudreau, 2000) (Glazer & Beehr, 2005) (Jex & Bliese, 1999) (LePine & Van Dyne, 1998). In recent past years, most researchers had talked about employee stress, creativity, organizational innovation, psychological capital and the behavior of employees; much literature also talked about what is the individual level factor which is affecting the growth of the organization (Abbas & Raja, 2015). (Arnetz & B.B, 1997) in his paper, he presented technological stress and studied how the psychophysiological aspects and working with modern information technology will be helpful from the organizational point of view (Hon, Chan, & Lu, 2013). This literature talked about how the work-related stress and creativity of employees are associated with the feedback of the supervisor. Based on that literature we argue that the relationship between the technostress creator and the employee and with that put the fourth of the following hypothesis:

Hypothesis 1: Technostress creator is negatively influencing the employee creativity.

Figure 1: Research Model

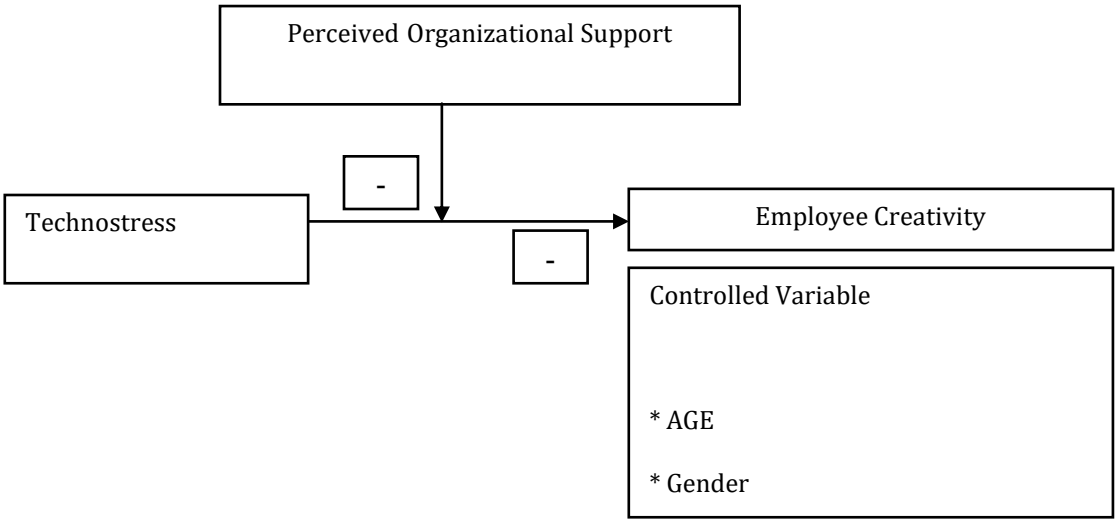

Moderating Influence of Perceived Organizational Support

In the existing literature perceived organizational support is used for employee creativity so that their creativity is used as a source for organizational competitiveness(Ibrahim, Isa, & Shahbudin, 2016), also employee experience the perceived support from the organization which benefits the organization's growth. Diliello, Houghton, & Dawley (2011) study talked about the perceived work-group support and how it's going to ice-break the employee potential for creativity so that they can be useful for the organization. Also when we are considering the technostress and POS studies are showing the moderating inversely influence of POS on the technostress (Wang & Shu, 2008). Based on the above studies we argue that there will be a negative influence of POS on the technostress creator and employee creativity relationship. Therefore we hypothesize:

Hypothesis 2: Perceived organizational support negativity moderates the relationship between the technostress creator and employee creativity.

Controlled Variables: As our study focused on employee creativity, the controlled variable used for it are employee age, gender, work tenure in the organization and education level.

4. Methodology

We will be using mixed-methods research designs "include quantitative and qualitative aspects" (Tashakkori and Teddlie 1998, p. 5). Mixed-methods designs are especially effective within the IS field since the nature of the environment changes regularly and researchers typically struggle to derive major conclusions from current theories and views (Venkatesh et al., 2013). Mixed-methods designs provide three distinct advantages: the capacity to "address confirmatory and explanatory research issues," "give stronger conclusions than a single method or viewpoint," and "generate a broader variety of divergent and/or complementary perspectives" (Venkatesh et al., 2016, p. 437). Given the overall dearth of research on technostress in a hospital environment, a mixed-methods approach is ideal for our study. The mixed-methods design of the present study began with three research questions: one qualitative, one quantitative, and one that used both qualitative and quantitative approaches (Venkatesh et al., 2016).

Our targeted population sample included management school graduates who completed a two-year postgraduate program at a public institution in India between 2018 and 2021. The institute's alumni database included names, roll numbers, email addresses, phone numbers, etc. We're seeking graduates from all batches. The survey email invitation included details on the study and requested that participants respond to the survey within a week. By assuring them of their privacy and promising to share the study's findings with them, we hoped to increase their willingness to take part. We will be using the scales which have been used in the past to measure Technostress creators (Tarafdar et al., 2011). How much do you disagree or agree with each statement (1-to-7-point scale; "1" means "Strongly disagree" and "7" represents "Strongly agree")?

Techno-Complexity

- "I do not know enough about the new ICTs to handle my job satisfactorily".
- "I do not find enough time to study and upgrade my ICT skills".
- "I need a long time to understand and use new ICTs".

Techno-Insecurity

- "Because of new ICTs, I feel a constant threat to my job security".
- "Because of new ICTs, I feel a constant need to update my skills to avoid being replaced".
- "Because of new ICTs, I feel constant threat by co-workers with newer ICT skills".

Techno-Invasion

- "Because of ICTs, I spend less time with my family".
- "Because of ICTs, I have to be in touch with my work even during my vacation".
- "Because of ICTs, I have to sacrifice my vacation and weekend time to keep current on new ICTs".

Techno-Overload

- "I am forced by ICTs to work much faster".
- "I am forced by ICTs to do more work than I can handle".
- "I am forced by ICTs to work with very tight time schedules".

Also, for data analysis we will be using the SPSS tool, the statistical analysis of data is performed with the help of a piece of software called SPSS (Statistical Package for the Social Sciences), which is also referred to as IBM SPSS Statistics. Although its first use was in the area of social sciences, its usage has now grown into other data markets, despite the fact that the name SPSS symbolizes its history in that discipline.

5. Conclusion and Recommendations

Due to the paucity of research that has been done on the direct influence that technology has on the creativity of employees. In addition, the link between the two is moderated by people's perceptions of the support they receive from their organizations. The goal of this essay was to contribute to the rapidly expanding body of research on technostress. The findings of this research indicate, on the whole, that a certain degree of stress is required since it will have a good effect on the well-being of both the workers and the organizations that they work for. It is intended that the results of this research will give valuable information and will be helpful to

organizations in the management of stress in the workplace, particularly stress caused by the use of technology. This type of research enables managers within an organization to better understand their staff members and to assist those staff members in realizing their full creative potential. This has consequences for the future of the organization.

We are considering using a mixed-method approach for this research in the progress report, as well as for our future research and methodology. During this, we will conduct interviews with people working in the IT field, and then find out the outcomes. The purpose of this study is to provide a comprehensive definition of technostress. To rephrase, we may say that the effects of technostress are both helpful and detrimental. This study presents (and assesses) a complete model of technostress in the context of health information technology and nursing. The article identifies a number of challenge and hindrance techno-stressors, as well as the positive and negative psychological emotions that evoke, and investigates the connection between these reactions and job satisfaction, turnover, and dissatisfaction. Overall, we believe our research will encourage IS researchers to reconsider the advantages and disadvantages of technostress in organizations and prompt them to do further research on the subject, especially in the medical field.

References

Abbas, M. & Raja, U. (2015). Impact of psychological capital on innovative performance and job stress. *Canadian Journal of Administrative Sciences/Revue Canadienne des Sciences de l'Administration*, 32(2), 128-138.

Akgunduz, Y., Alkan, C. & Gök, Ö. A. (2018). Perceived organizational support, employee creativity and proactive personality: The mediating effect of meaning of work. *Journal of Hospitality and Tourism Management*, 34, 105-114.

Arnetz, B. B. (1997). Technological stress: psychophysiological aspects of working with modern information technology. Scandinavian journal of work, environment & health, 97-103.

Cavanaugh, M. A., Boswell, W. R., Roehling, M. V. & Boudreau, J. W. (2000). An empirical examination of self-reported work stress among US managers. *Journal of applied psychology*, 85(1), 65.

Chen, M. H. & Kaufmann, G. (2008). Employee creativity and R&D: A critical review. *Creativity and Innovation Management,* 17(1), 71-76.

Diliello, T. C., Houghton, J. D. & Dawley, D. (2011). Narrowing the creativity gap: The moderating effects of perceived support for creativity. *The Journal of Psychology,* 145(3), 151-172.

Eisenberger, R., Huntington, R., Hutchison, S. & Sowa, D. (1986). Perceived organizational support. *Journal of Applied psychology,* 71(3), 500.

Glazer, S. & Beehr, T. A. (2005). Consistency of implications of three role stressors across four countries. Journal of Organizational Behavior: *The International Journal of Industrial, Occupational and Organizational Psychology and Behavior,* 26(5), 467-487.

Greg, R., Schmidt, D. C., Lavender, R. G., Schmidt, C. & Peers, P. (1996). Active Object-An Object Behavioral Pattern for Concurrent Programming.

Hon, A. H. (2013). Does job creativity requirement improve service performance? A multilevel analysis of work stress and service environment. *International Journal of Hospitality Management*, 35, 161-170.

Hon, A. H., Chan, W. W. & Lu, L. (2013). Overcoming work-related stress and promoting employee creativity in the hotel industry: The role of task feedback from supervisor. *International Journal of Hospitality Management*, 33, 416-424.

Ibrahim, H. I., Isa, A. & Shahbudin, A. S. M. (2016). Organizational support and creativity: The role of developmental experiences as a moderator. *Procedia Economics and Finance*, 35, 509-514.

Jex, S. M. & Bliese, P. D. (1999). Efficacy beliefs as a moderator of the impact of work-related stressors: a multilevel study. *Journal of applied psychology,* 84(3), 349.

Karkoszka, T. & Honorowicz, J. (2009). Kaizen philosophy is a manner of continuous improvement of processes and products. *Journal of Achievements in Materials and Manufacturing Engineering*, 35(2), 197-203.

LePine, J. A. & Van Dyne, L. (1998). Predicting voice behavior in work groups. *Journal of applied psychology*, 83(6), 853.

Naseem, K. (1984). Job stress and employee creativity: The mediating role of emotional intelligence. *Stress,* 27, 2-1.

Nohria, N., Groysberg, B. & Lee, L. E. (2008). Employee motivation. *Harvard business review*, 86(7/8), 78-84.

Oldham, G. R. & Cummings, A. (1996). Employee creativity: Personal and contextual factors at work. *Academy of management journal*, 39(3), 607-634.

Rothaus, P., Morton, R. B. & Hanson, P. G. (1965). Performance appraisal and psychological distance. *Journal of Applied Psychology*, 49(1), 48.

Simonton, D. K. (1984). Artistic creativity and interpersonal relationships across and within generations. *Journal of personality and social psychology,* 46(6), 1273.

Tarafdar, M., Tu, Q., Ragu-Nathan, T. S. & Ragu-Nathan, B. S. (2011). Crossing to the dark side: examining creators, outcomes, and inhibitors of technostress. *Communications of the ACM*, 54(9), 113-120.

Tashakkori, A., Teddlie, C. & Teddlie, C. B. (1998). Mixed methodology: Combining qualitative and quantitative approaches, 46.

Venkatesh, V., Brown, S. A. & Bala, H. (2013). Bridging the qualitative-quantitative divide: Guidelines for conducting mixed methods research in information systems. MIS Quarterly, 21-54.

Venkatesh, V., Brown, S. A. & Sullivan, Y. (2016). Guidelines for conducting mixed-methods research: An extension and illustration. Venkatesh, V., Brown, SA, and Sullivan, YW "Guidelines for Conducting Mixed-methods Research: *An Extension and Illustration," Journal of the AIS*, 17(7), 435-495.

Wang, K. & Shu, Q. (2008, September). The moderating impact of perceived organizational support on the relationship between technostress and role stress. In 2008 19th International Workshop on Database and Expert Systems Applications (pp. 420-424). IEEE.

Woodman, R. W., Sawyer, J. E. & Griffin, R. W. (1993). Toward a theory of organizational creativity. *Academy of management review*, 18(2), 293-321.

Zhang, X. & Bartol, K. M. (2010). Linking empowering leadership and employee creativity: The influence of psychological empowerment, intrinsic motivation, and creative process engagement. *Academy of management journal,* 53(1), 107-128.

Zhao, D. & Rosson, M. B. (2007). Facilitating Employee Creativity: What Can We Learn from Online Work Community?

Information Management and Business Review (IMBR)
Vol. 14, No. 2, June 2022 (ISSN 2220-3796)

The Quality of Investigation Audit Influenced by Independence and Integrity

Mahendro Sumardjo[1], Najmatuzzahrah[2], Khoirul Aswar[3*]
[1, 3] Universitas Pembangunan Nasional Veteran Jakarta, Indonesia
[2] Badan Pemeriksa Keuangan, Kepala Perwakilan Bengkulu
khoirulaswar@upnvj.ac.id

Abstract: Quality audits are important not only for investigators but also for auditors when advancing as experts in court. Therefore, the formation of MIA to handle investigative examinations is BPK's answer to the phenomena that occur in society related to the quality of the results of BPK investigations. However, even after the formation of MIA, there were still complaints from the public regarding the quality of the results of investigative examinations. BPK received a lot of attention because of actions that were not in accordance with the BPK auditors' code of ethics, namely integrity violations that resulted in arrest by law enforcers and undergoing trial at the Corruption Court. For this reason, auditors must always maintain an attitude of mental independence, in all matters relating to the provision of audit services, to improve audit quality. This study aims to analyze how independence and integrity can increase the quality of investigation audit. This study involved 267 investigators of Law Enforcement Agencies as respondents using a questionnaire. Furthermore, the data were analyzed using descriptive statistical analysis and SEM techniques. The results of this study provide empirical evidence that independence and integrity have a significant positive effect on the quality of investigation audit.

Keywords: *Independence, Integrity, the Quality of Investigation Audit, BPK.*

1. Introduction

Based on Article 23E of the 1945 Constitution, the Audit Board of the Republic of Indonesia, hereinafter referred to as BPK, has the mandate to examine the management and responsibility of state finances. Further provisions for the implementation of this mandate are spelled out in RI Law Number 15 of 2004 concerning Audit of the Management and Accountability of State Finances and RI Law Number 15 of 2006 concerning the Audit Board. The two laws further regulate the audits conducted by the BPK on state finances. Since the publication of bureaucratic reform in Indonesia, BPK has been required to become a professional audit institution. Therefore, the BPK then made a series of changes, both in terms of institutions, improving the quality of audit results, increasing employee professionalism, improving infrastructure, and fulfilling the budget. These changes are expected to bring about New BPK: Leading by Example. In addition, BPK is also expected to be able to improve audit performance which is of concern to stakeholders. The results of audits of financial reports, performance and audits with specific purposes become public references. This condition prompted BPK to change the audit paradigm to create a prosperous Indonesia. To realize the New BPK: Leading by Example, the BPK has compiled a Strategic Plan so that the ongoing process of change can be directed towards achieving BPK's Vision and Mission.

Therefore, since 2006, the BPK has compiled the 2006-2010 Strategic Plan, the 2011-2015 Strategic Plan, and the 2016-2020 Strategic Plan as a form of BPK's commitment to producing the highest quality audit reports. Quality audits are important not only for investigators but also for auditors when advancing as experts in court. Therefore, the formation of MIA to handle investigative examinations is BPK's answer to the phenomena that occur in society related to the quality of the results of BPK investigations. However, even after the formation of MIA, there were still complaints from the public regarding the quality of the results of investigative examinations. According to Whittington & Pany (2011), factors that affect audit quality, one of which is auditor specialization. They asserted that an auditor will be able to conduct a higher-quality audit than auditors who are not experts in the client's industry sector when the auditor becomes a specialist or expert in that industry, that is when the auditor has a great deal of experience and knowledge of that business. In addition, Louwers et al. (2008) state that the mental attitude of auditor independence is a cornerstone of the high-quality audit.

It is recommended that auditors always maintain their mental attitude of independence, in all matters relating to the provision of audit services, to improve audit quality. The phenomenon of the low audit quality

of BPK, has appeared since before MIA was formed until now, among others, the existence of phenomena in society through the following phenomena: Examination is a process of problem identification, analysis and evaluation carried out independently, objectively, and professionally based on examination standards, to assess the truth, accuracy, credibility and reliability of information regarding the management and responsibility of state finances (RI Law No. 15 of 2004). The term examination can be called "audit". An audit is the collection and evaluation of evidence about information to determine and report on the degree of conformity between the information and criteria set, auditing must be carried out by competent and independent people (Arens et al., 2017). Then Akbar et al. (2016) stated that an auditor to support audit performance must have a competency that can be obtained and improved through two factors, namely experience and education. According to Whittington & Pany (2010), auditor specialization is a factor that affects audit quality. They stated that when an auditor becomes a specialist or an expert in a certain industry, that is, has a lot of experience and deep understanding in a particular client's specific industry, then the auditor will be able to produce a quality audit that is higher quality than with auditors who are not specialized in the client's specific industry area.

In addition, Louwers et al. (2008) state that the mental attitude of auditor independence is a cornerstone of a high-quality audit. It is recommended that auditors always maintain their mental attitude of independence, in all matters relating to the provision of audit services, to improve audit quality. The phenomenon of the low audit quality of BPK, has appeared since before MIA was formed until now, among others, the existence of phenomena in society through the following phenomena: Iskandar Sitorus (in Edj, 2009) stated that the results of the investigation into the Century case conducted by BPK were invalid. The quality of the results of the BPK investigation audit is doubtful because it cannot conclude who is involved and cannot state a clear loss figure. Agus Martowardoyo (in Lestari, 2012) stated that the audit report on Hambalang resources produced by BPK did not reflect the audit results. complete and good. Margarito Kamis (in Sasongko, 2016) stated that he had no second opinion. BPK works based on authority, so it cannot debate the results of the audit. It is because it is not an audit requiring a response plan or the party being audited. He apologized to Ahok to make sure, the BPK audit was about what the answer was incorrect. Margarito said, in the criminal act of corruption, everyone has the right to violate administrative law. However, if no state loss is found, the situation is based on administration. But once there is a state loss, all of it turns into a nature that violates criminal law, that's corruption. Yusril Ihza Mahendra (in Sutiawan, 2018) stated that the 2017 BPK Investigation Audit Report did not meet the financial audit standards set by the BPK, namely BPK Regulation Number 1 of 2017, in particular items 21 to 26.

In addition to the phenomenon related to the low quality of investigation audits described above, BPK has received a lot of attention due to actions that are not in accordance with the BPK auditors' code of ethics, namely in the form of integrity violations that occurred when the examination was carried out which resulted in arrest by law enforcement agencies and undergoing trial at the Corruption Court, are as follows:

- Two BPK auditors, Enang Hernawan and Suharto, were sentenced to a judge with a sentence of four years in prison. Apart from corporal punishment, the two defendants were also obliged to pay a fine of Rp200 million. If not paid, the sentence is replaced with three months in prison (Fat, 2010).
- Drs Bahar (Head of the Examination Team in BPK) was sentenced to imprisonment of four years and six months, while the defendant Munzir (Member of the Examination Team in BPK) was sentenced to four years in prison. The two defendants were also sentenced to be fined Rp 200 million and if not paid, it was replaced by a penalty (subsidiary) of one month in prison (Tanauma, 2012).
- BPK's auditor, Sigit Yugoharto is considered proven to have accepted bribes from the General Manager of Jasa Marga, Purbaleunyi Branch, Setia Budi. The judge sentenced him to 6 years imprisonment and a fine of 250 million rupiahs (Gabrillin, 2018). Meanwhile, in Sembiring (2017), President Joko Widodo praised and appreciated BPK's performance at the 2017 Annual Session of the People's Consultative Assembly. According to President Jokowi, BPK's performance is getting better at home and abroad. The BPK and the Government Internal Supervisory Apparatus have synergized to overcome the overlapping audit conditions.

In addition, President Jokowi appreciated the Audit Result Follow-up Monitoring Information System implemented by the BPK so that the follow-up on the results of examinations in each ministry and government agency can be monitored accurately, efficiently and on time. According to Messier & Prawitt

(2008), Public Accounting Firms (PAF) must always evaluate their commitment, to providing high-quality audit by maintaining the integrity and objectivity of their professional staff (partners and staff), to maintain their reputation in the eyes of the audit service user community. Similar to the BPK, the BPK must be able to maintain a commitment to produce high quality of audit quality by maintaining and ensuring that auditors have high integrity and objectivity when carrying out audits. Thus, the public's expectation of quality audit results from BPK can be realized.

2. Literature Review and Hypothesis Development

Independence: Independence in auditing is behavior that is free from conflicts of interest or the influence of other parties in determining a decision so that it is unbiased and objective in accordance with the facts. Independence is a state of mind that is unaffected by outside forces, unaffected by outside forces' control, and independent of outside forces. Auditor independence refers to the auditor's integrity in assessing the facts and to their use of impartial, unbiased criteria when generating and presenting opinions (Mautz & Sharaf, 1993; Elliott & Jacobson, 1998; Hayes et al., 2005; Patrick, Vitalis & Mdoom, 2017; Rittenberg, Johnstone, Gramling, 2010). Based on the opinions of several experts and previous researchers (Hayes et al., 2005; Arens, Elder & Beasley, 2012; IESBA, 2014; Arens et al., 2017) the measurement of independence variable uses several dimensions and indicators, namely: 1) **I**ndependence of the Audit Program (freedom to determine specific audit techniques, freedom to determine the audit procedures to be used, and freedom to determine alternative examination procedures); 2) Independence of the Audit Investigative (freedom in determining the key areas of the examination, freedom in carrying out activities to obtain audit evidence, and freedom from personal interests that hinder the audit); and 3) Independence of the Audit Reporting (freedom to write down irregularities or fraud that occurred, free to write down the amount of state loss according to audit evidence, and freedom to write down parties related to fraud).

Integrity: Integrity is the moral character of auditors to do things that are honest, fair, and in accordance with prevailing norms and regulations. Integrity is also defined as a quality/ characteristic of individual and organizational behavior; it can even be considered as a corporate culture that applies to individuals and organizations (ICAEW, 1997; IFAC, 2006; IAPI, 2011; Arens et al., 2017). Based on the opinions of several experts and previous researchers (ICAEW, 2007; OECD, 2009) the measurement of integrity variable uses several dimensions and indicators, namely: 1) Moral values (auditors have honesty values in their daily activities, auditors dare to reveal the truth, and auditors are able to carry out the values of justice); 2) Commitments (auditor has character only words with deeds, the auditor who is serious in carrying out the examination, and auditors who have the will to complete work); and 3) Qualities (auditors have the character of accepting open-mindedness, auditors have the ability to adapt to the environment, and auditors have the courage to fight for something that is believed to be true).

The Quality of Investigation Audit: The quality of audit is the level of quality of audit results determined by the absence of material misstatements/ procedures, the achievement of audit objectives through methodologies or guidelines prepared by the auditor, legally accountable in court, carried out in accordance with the applicable code of ethics and regulations and does not cause problems/ unrest in the community (DeAngelo, 1981; Arrunada, 1999; GAO, 2003; Hayes et al., 2005; Gul, Wu, & Yang, 2013; Lee, 2016). Based on the opinions of several experts and previous researchers (FRC, 2008; Francis, 2011; Knechel et al., 2012), the measurement of the quality of investigation audit variable uses several dimensions and indicators, namely: 1) Auditor Competence (have a certificate of investigative auditing expertise, having the ability to conduct audits and investigations, and having experience doing investigation audits); 2) Process of Implementation Investigative Audit (understanding the audit risk, following the standards/guidelines that have been set, and infrastructure that supports the implementation of investigation audits); 3) Reporting the Investigative Audit Result (reveal any irregularities, disclose the parties related to irregularities, and disclose the impact of deviations that occur). According to Sekaran and Bougie (2013), the hypothesis is logically conjectured relationship between two or more variables expressed in the form of a testable statement. In accordance with the above understanding, the hypothesis is a logically suspected relationship between two or more variables in the formulation of propositions that can be tested empirically.

Independence and Investigation Audit Quality: According to DeAngelo (1981), when used as a proxy for audit quality, fee dependence on a client can be thought of as the relative size of client-specific quasi-rent. The independence of the auditor is one element of the quality of the audit, according to Chang & Monroe (2001). The possibility of diminished independence has an impact on how well auditors perceive the quality of the audit. Furthermore, Jamal & Sunder (2011) stated independence (in fact as well as in appearance) is widely thought to be necessary for the quality of audit, and audit quality is often equated with independence. It is clear from the justifications and conclusions of various earlier researchers that auditor independence affects audit quality. This means that the higher the BPK upholds the independence of auditors in conducting audits, the higher the quality of the audit quality it produces. If the level of auditor independence decreases, then both public perceptions and auditors' own perceptions of the audit quality they produce will also decrease, because auditor independence is believed to be a major milestone in audit quality (DeAngelo, 1981; Chang & Monroe, 2001; Jamal & Sunder, 2011; Rivaldi et al., 2022).
H_1: The impact of independence on investigation audit quality.

Integrity and Investigation Audit Quality: According to Broberg (2013), auditor quality and characteristics including integrity matter to audit quality. Then, according to Bouhawia, Irianto, and Baridwan (2015), job experience, integrity, competence, and organizational dedication have a big impact on audit quality. Integrity and audit results quality showed a substantial and favorable correlation. Susilo & Widyastuti (2015) explain that integrity has a positive effect on audit quality. These results illustrate how important honesty and confidence are in shaping good moral character in an auditor, the moral character an auditor must have in carrying out his performance as an examiner of financial statements can help obtain good audit quality. Thus, based on the research results above, it can be concluded that integrity has a positive effect on audit quality (Broberg, 2013; Bouhawia, Irianto & Baridwan, 2015, and Susilo & Widyastuti, 2015).
H_2: The impact of integrity on investigation audit quality.

3. Research Methodology

The object in this study is the influence of independence and integrity on the quality of investigation audit. By testing hypotheses, this study employs descriptive and causal-explanatory approaches. Based on the research time horizon, included in the category of cross-sectional studies, namely research performed over a period of time, data is collected only once, perhaps in several days or weeks or months, to answer research questions (Sekaran and Bougie, 2013). The data used are primary data collected through instruments (questionnaires) and secondary data. The unit of analysis in this study is investigators at 3 Law Enforcement Agencies (the Indonesian National Police, the Attorney General's Office, and the Corruption Eradication Commission), who have experience working together to uncover cases through investigation audits conducted by BPK. Thus, the sample size set in this study was 267 investigators from 94 Work Units of 3 Law Enforcement Agencies in Indonesia. This study can be regarded as survey research because of the measurement process used to collect information using a questionnaire with a Likert scale. The questionnaire was distributed by visiting the respondent directly and via e-mail. In this study, descriptive statistics were used by compiling a frequency distribution table to determine the level of value (average score) of the research variable. The categorization of respondents' answer scores is arranged based on the maximum score range and the minimum score divided by the number of desired categories. The guidelines for categorizing the research variable scores are presented in Table 2.

Table 2: The Guidelines for Categorizing the Research Variable Scores

Scores	Categorizing
1.00 – 1.80	Not Good
1.81 – 2.60	Not Fair
2.61 – 3.40	Fair
3.41 – 4.20	Good

This study uses quantitative methods with probability statistics which are statistical techniques used to analyze sample data and the results will be applied to the population by testing the significance level of sample data on population parameters through the t-statistics on the confidence interval of 95% and the risk of error at α = 5%. The research hypothesis will be investigated using Lisrel statistical software and the

Structural Equation Modeling (SEM) method. In this study, the construct or latent variable cannot be measured directly using observed variables or indicators. So that it must be lowered first in the form of dimensions, then can it be reflected through the indicators according to the theory used. Indicators used to measure latent variables must be tested for the validity and reliability of the instrument. The test uses the concept of Confirmatory Factor Analysis (CFA). According to Wijanto (2015), a variable is said to have good validity for constructs or latent variables if the value of the t-factor is greater than the critical value ($t_{value} \geq 1.96$) and the standard factor loading ≥ 0.70. According to Hair et al. (2014), factor loading values below 0.50 are very significant and the indicator can be deemed to be legitimate. In SEM reliability testing uses a composite reliability measure and Varian extracted measure. A construct that has good reliability is if the value of Construct Reliability (CR) ≥ 0.70 and the value of Variance Extracted (VE) ≥ 0.50. Next is the preparation of a flowchart which aims to examine the influence of independent variables (exogenous) on the dependent variables (endogenous) as shown in Figure 2.

Based on Figure 2, then the structural model in this study is formulated mathematically, as follows:

$$\eta_1 = \gamma_{11}\xi_1 + \gamma_{21}\xi_2 + \zeta$$

Description: ξ_1 = independence variable; ξ_2 = integrity variable; η1= the quality of investigation audit variable; γ = path coefficient between exogenous latent variables; and ζ = measurement error of endogenous latent variables. The stages of data analysis in this study were developed using the concept of SEM. Furthermore, only the over-identified model that meets the requirements for analysis is based on the following degree of freedom formula requirements: $df = ½ (p+q) (p+q+1) – t > 0$. Description: p = number of exogenous observed variables; q = number of endogenous observed variables; and t = number of parameters to be estimated. The model in this study has a value of p = 18, q = 9, t = 68, with a value of df = ½ (18+9) (18+9+1) - 68 = ½ (27)(28) - 68 = 378 – 68 = 310 > 0, then this research model is identified to over-identified so that it can be continued into the parameter estimation stage. The author chose to use the Maximum Likelihood (ML) method to estimate the parameters of this research model. The next step is to evaluate the Goodness of Fit (GoF) between the data and the research model. After the model is fit with the data, the hypotheses built into the research model can be tested.

Figure 1: Flowchart Research Model

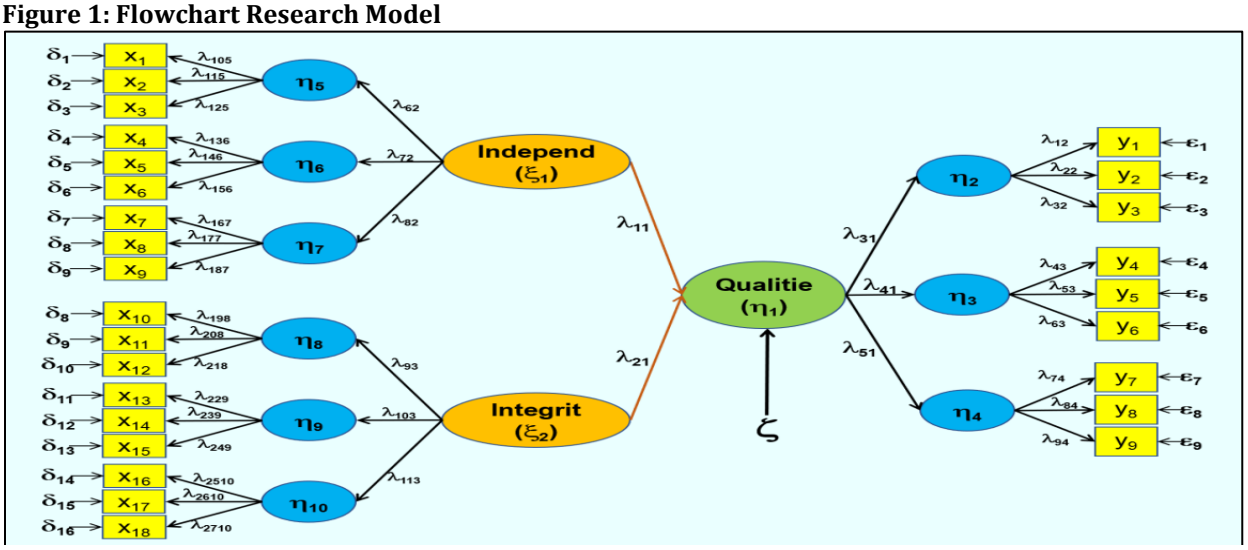

4. Results and Discussion

Descriptive Statistics Analysis: Based on the answers of 267 respondents, the descriptive statistical analysis provided data on average scores and categorization of answers for each variable as presented in Table 3. The variables have a total score and are categorized as "very good" so it has an average score of 4.80 which is also very good.

Table 3: Analysis of Research Variable Scores

No.	Variable	Σ Score	Mean	Categorization
1	Independence	11,514	4.79	Very Good
2	Professionalism	15,547	4.81	Very Good
3	The Quality of Investigation Audit	11,586	4.82	Very Good
	Total	**34,647**	**4.80**	**Very Good**

Source: Data Processing Results (2020).

Confirmatory Factor Analysis (CFA): The suitability of the measurement model was tested using confirmatory factor analysis to find out the unidimensional of the indicators that explained a factor or variable formed. The following are described as confirmatory factor analyses in each research variable.

Independence Variable: This exogenous variable is assessed using three dimensions and nine indicators. Based on Figure 2, The factor loading values for all indicators are greater than 0.5, but the RMSEA is still greater than 0.08. Furthermore, the results of re-specification in Figure 4 show RMSEA value below 0.08. In detail, the value of factor loading can be seen in Table 3. Based on Table 4's findings from the first-order test on the dimensions of IAP, IAI, and IAR, it can be concluded that all of the indicators are legitimate for evaluating each dimension because their factor loadings are all more than 0.5. For all CR values more than 0.7 and VE values larger than 0.5, it is trustworthy. This confirms that the indicators' measurements of each dimension are accurate.

Figure 2: CFA Test of Independence Variable (Standardized)

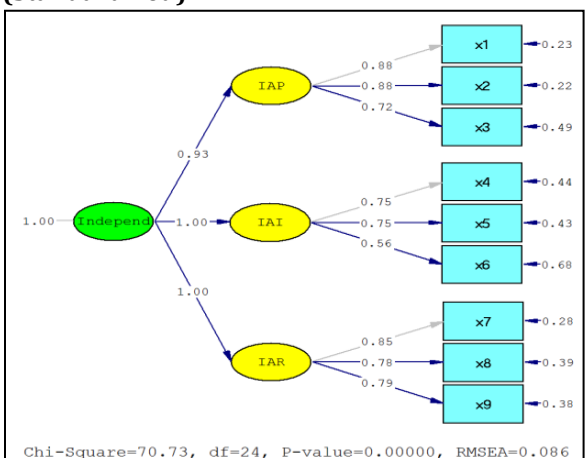

Figure 3: CFA Test of Re-specification of Independence Variable (Standardized)

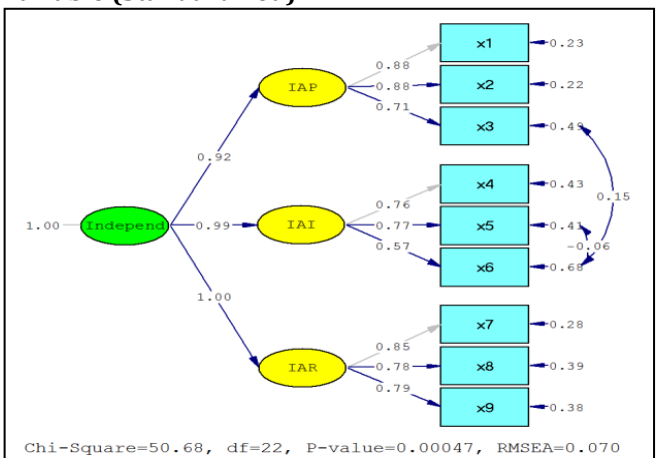

All dimensions have factor loading over 0.5 in the results of the second-order test on the Independence Variable, indicating that all dimensions are valid in assessing Independence Variable. As a result, the factor loading of the IAR Dimension is the highest, making it the strongest in reflecting Independence Variable, whereas the factor loading of the IAP Dimension is the lowest, making the dimension the weakest in reflecting Independence Variable. It is reliable since the CR value is 0.92 > 0.7 and the VE value is 0.94 > 0.5. This demonstrates that while measuring Independence Variable, the three dimensions are consistent.

Table 4: Result of Re-Specification of Independence Variable Validity and Reliability Test

Latent Variable	Indicator	λ	λ^2	ε	CR	VE	Information
First Order							
IAP	x1	0.88	0.77	0.23			
(Independence of	x2	0.88	0.77	0.23	0.87	0.68	Reliable
the Audit Program)	x3	0.71	0.50	0.50			
IAI	x4	0.76	0.58	0.42	0.75	0.50	Reliable
(Independence of	x5	0.77	0.59	0.41			

the Audit Investigative)	x6	0.57	0.32	0.68			
IAR	x7	0.85	0.72	0.28			
(Independence of	x8	0.78	0.61	0.39	0.85	0.65	Reliable
the Audit Reporting)	x9	0.79	0.62	0.38			
Second Order							
	IAP	0.92	0.85	0.15			
Independence	IAI	0.99	0.98	0.02	0.98	0.94	Reliable
	IAR	1.00	1.00	0.00			

Source: The results of data processing (2020).

Integrity Variable: This exogenous variable is assessed using three dimensions and nine indicators. According to Figure 4, despite the fact that every indicator has factor loading values higher than 0.5, the RMSEA is still higher than 0.08. Furthermore, the results of re-specification in Figure 6 show RMSEA value below 0.08. In detail, the value of factor loading can be seen in Table 5.

Figure 4: CFA Test of Integrity Variable (*Standardized*)

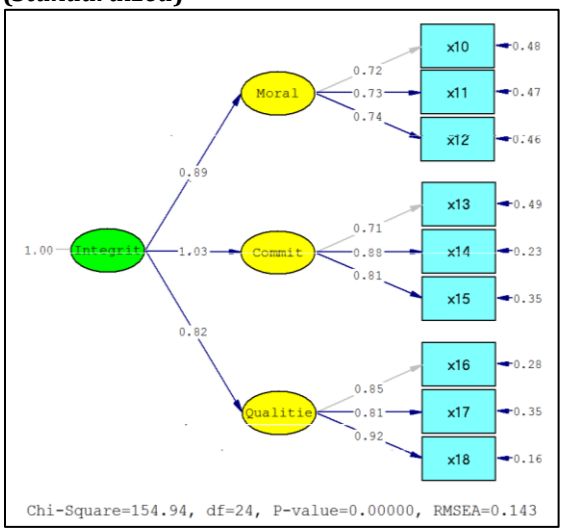

Figure 5: CFA Test of Re-Specifications of Integrity Variable (*Standardized*)

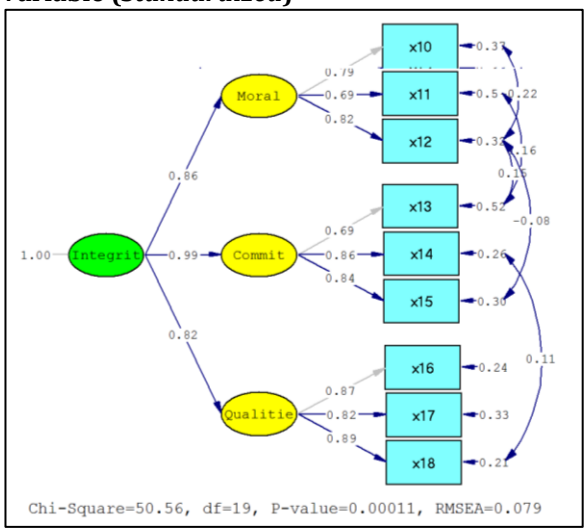

All indicators have factor loading over 0.5, according to Table 5, the results of the first-order test on the dimensions of Moral Values, Commitments, and Qualities, indicate that all indicators are valid in measuring each dimension. For all CR values greater than 0.7 and VE values greater than 0.5, it is dependable. This confirms that the indicators' measurements of each dimension are accurate. According to the findings of the second-order test on the Integrity Variable, all dimensions have factor loadings over 0.5, which shows that they are all valid for evaluating the Integrity Variable. As a result, the Qualities Dimension has the lowest factor loading, making it the least effective at reflecting the Integrity Variable, whereas the Commitments Dimension has the highest factor loading and is therefore the strongest at doing so. As a result, it is dependable as evidenced by the CR value of 0.92 > 0.7 and the VE value of 0.80 > 0.5. This shows that the Integrity Variable is consistently measured across all three dimensions.

Table 5: Re-Specification of Integrity Variable Validity and Reliability Test Results

Latent Variable	Indicator	λ	λ^2	ε	CR	VE	Information
First Order							
	x10	0.79	0.62	0.38			
Moral values	x11	0.69	0.48	0.52	0.81	0.59	Reliable
	X12	0.82	0.67	0.33			
	X13	0.69	0.48	0.52			
Commitments	X14	0.86	0.74	0.26	0.84	0.64	Reliable
	X15	0.84	0.71	0.29			

Table 5: Re-Specification of Integrity Variable Validity and Reliability Test Results

Latent Variable	Indicator	λ	λ²	ε	CR	VE	Information
	X16	0.87	0.76	0.24			
Qualities	X17	0.82	0.67	0.33	0.90	0.74	Reliable
	X18	0.89	0.79	0.21			
Second Order							
	Moral	0.86	0.74	0.26			
Integrity	Commit	0.99	0.98	0.02	0.92	0.80	Reliable
	Qualities	0.82	0.67	0.33			

Source: The results of data processing (2020).

The Quality of Investigation Audit (Quality) Variable: This endogenous variable is assessed using three dimensions and nine indicators. Figure 6 demonstrates that despite the factor loading values for all indicators being higher than 0.5, the RMSEA is still higher than 0.08. Furthermore, the results of re-specification in Figure 7 show RMSEA value below 0.08. To detail, the value of factor loading can be seen in Table 6.

Figure 6: CFA Test of Quality Variable (*Standardized*)

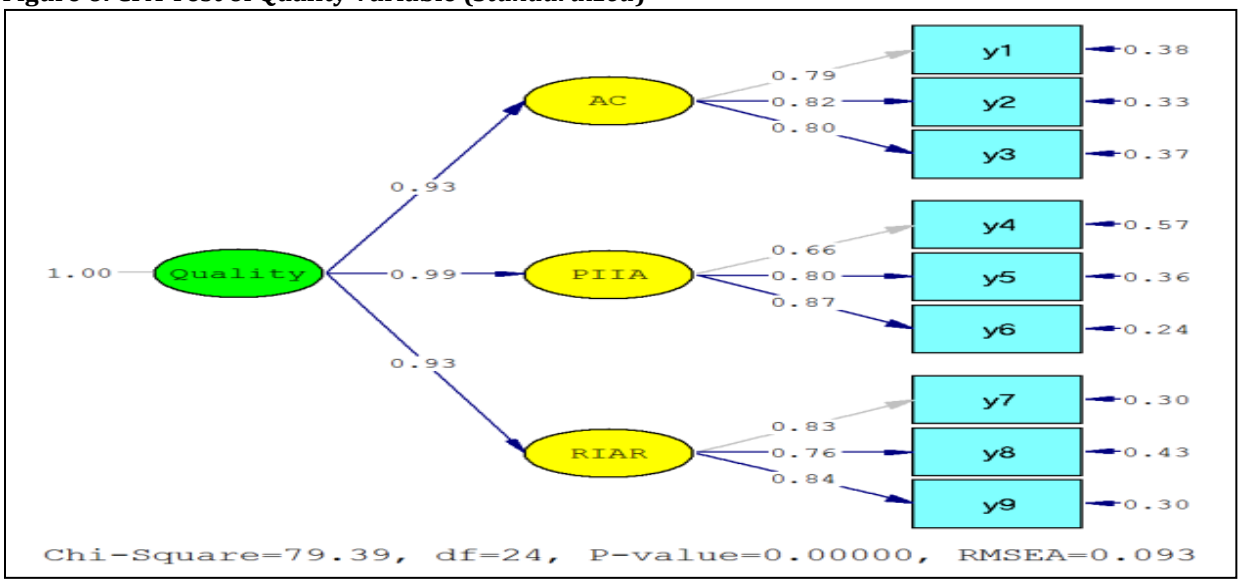

All of the indicators have factor loading above 0.5, according to Table 6, the results of the first-order test on the dimensions of AC, PIIA, and RIAR, indicate that all indicators are legitimate in measuring each dimension. It is reliable for all CR values over 0.7 and VE values above 0.5. This demonstrates that the indicators are consistent in their measurements of each dimension. All dimensions had factor loadings above 0.5 in the results of the second-order test on the quality variable, making them all legitimate for measuring the quality variable. As a result, the factor loading of the PIAA Dimension has the highest value, making it the strongest in reflecting Quality Variable, while the AC Dimension has the lowest value, making the dimension's ability to reflect the Quality Variable the weakest. As a result, it is dependable because the values of CR and VE are 0.90 and 0.97, respectively. This demonstrates the consistency with which the three dimensions measure the quality variable.

Figure 7: CFA Test of Re-Specification of Quality Variable (*Standardized*)

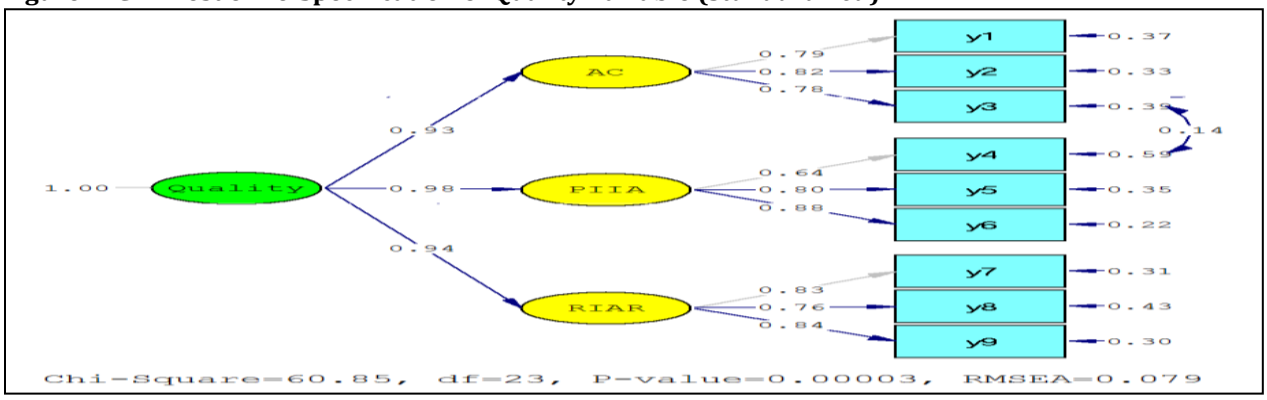

Table 6: Re-Specification of Quality Variable Validity and Reliability Test Results

Latent Variable	Indicator	λ	λ²	ε	CR	VE	Information
First Order							
AC (Auditor Competence)	y1	0.79	0.62	0.38	0.84	0.63	Reliable
	y2	0.82	0.67	0.33			
	y3	0.78	0.61	0.39			
PIIA (Process of Implementation Investigative Audit)	y4	0.64	0.41	0.59	0.82	0.61	Reliable
	y5	0.80	0.64	0.36			
	y6	0.88	0.77	0.23			
RIAR (Reporting of Investigative Audit Results)	y7	0.83	0.69	0.31	0.85	0.66	Reliable
	y8	0.76	0.58	0.42			
	y9	0.84	0.71	0.29			
Second Order							
Quality of Investigation Audit	AC	0.93	0.86	0.14	0.97	0.90	Reliable
	PIIA	0.98	0.96	0.04			
	RIAR	0.94	0.88	0.12			

Source: The results of data processing (2020).

Test Result of Full Structural Model: The evaluation findings of the fit model are discussed in this section, together with parameter estimates derived from the structural equation model. In this study, the theoretical model was used to construct the empirical model, which calls for thorough model testing. The whole structural model estimation was subsequently completed, as illustrated in Figure 8, after confirmatory component analysis for each latent variable.

Figure 8: Full Structural Model (*Standardized*)

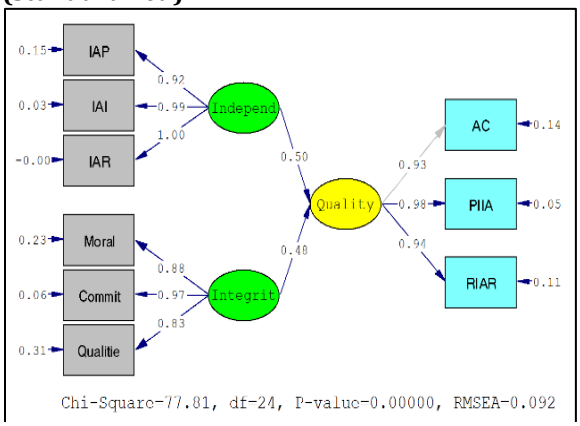

Figure 9: Re-specifications of Full Structural Model (*Standardized*)

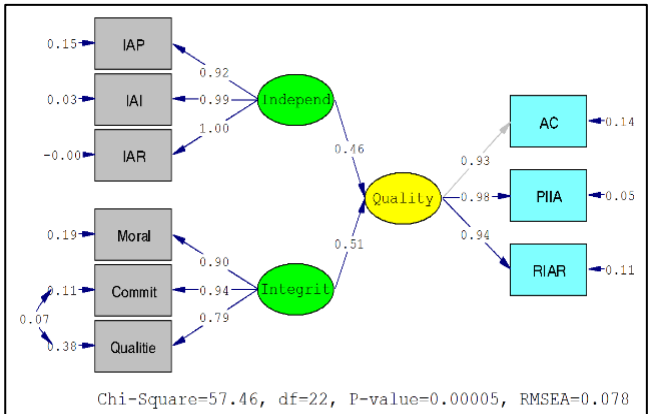

According to Figure 8, all indicators have factor loading values that are higher than 0.05 but still have RMSEA values that are higher than 0.08. For this reason, it is necessary to re-specification the Full Structural Model as shown in Figure 9. Furthermore, the results of the Lisrel based on the re-specifications of the Full Structural Model produce the structural equations mathematically: The Quality of Investigation Audit = 0.46 Independence + 0.51 Integrity + 0.16: Furthermore, to test the full model of SEM is done with 2 types of conformity model testing and model hypothesis testing. To determine the model's fairness or applicability, full SEM testing models are used. The values of recommended fit indexes, as shown in Table 7, are used to assess the adequacy of structural equation models.

Table 7: Evaluation of Indexes Fit of Re-specifications Full Structural Model

No.	Goodness of Fit	Target Value	Value	Description
1	*Chi-square (P-value)*	*expected small (≥ 0.05)*	57.46 (0.00005)	Small (Not Fit)
2	RMSEA	≤ 0.08	0.078	Fit
3	NFI	≥ 0.90	0.99	Fit
4	NNFI	≥ 0.90	0.99	Fit
5	CFI	≥ 0.90	0.99	Fit
6	IFI	≥ 0.90	0.99	Fit
7	RFI	≥ 0.90	0.98	Fit
8	SRMR	≤ 0.05	0.022	Fit
9	GFI	≥ 0.90	0.95	Fit
10	AGFI	≥ 0.90	0.91	Fit

Source: Results of Data Processing (2020).

Based on Table 7, the results of assessing the overall model's applicability can be noticed, except for P-value, practically all GoF indices meet the fit criteria, indicating that the analysis can proceed to the next step of testing the research hypotheses. While the summary of the results of the structural model estimation of the relationship between latent variables through the path coefficient test is presented in Table 8 as the Lisrel results are shown in Figure 10.

Figure 10: Re-Specifications of Full Structural Model (T-*values*)

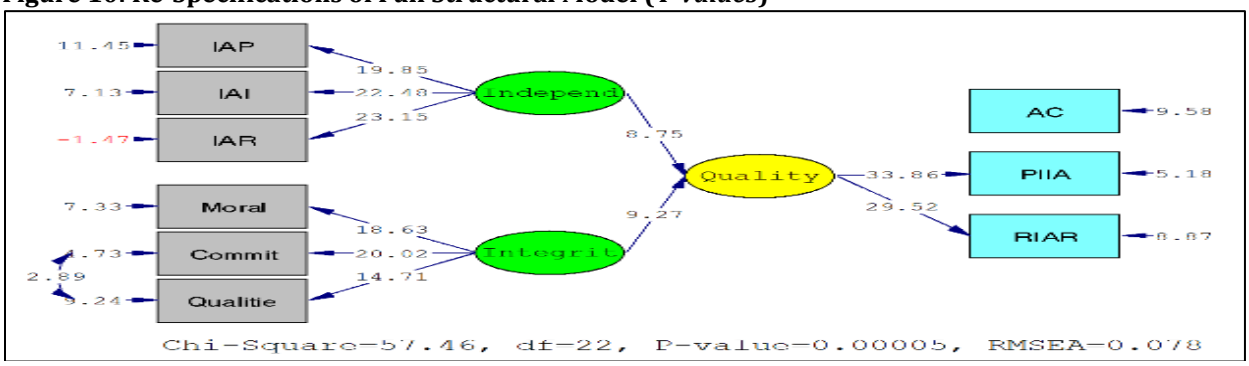

As can be observed from Table 8, the variables Independence and Integrity have an 84 percent influence on the Quality of Investigation Audit Variable. Other variables, in addition to the two independent variables, determine the remaining 16 percent. The most important factor affecting the quality of the investigation audit is integrity, which has a path value of 0.51; it is followed by independence, which has a path value of 0.46.

Table 8: Results of Path Coefficient Estimates and Statistical Tests

Relationship	Path Coefficient	T-value	R-square (Simultan)
Independ → Quality	0.46	8.75	0.84
Integrit → Quality	0.51	9.27	

Source: The results of data processing (2020).

Hypotheses Testing: The t-test statistics are used to test the hypothesis, and the findings are shown in Table 8. The results show that H0 is rejected if the t value is more than 1.96 or less than 1.96 for a value of 0.05 in the 95 percent confidence interval.

1) Hypothesis 1: The Influence of Independence on the Quality of Investigation Audit

$H_0 : \gamma_{11} = 0$	Independence has no influence on the Quality of the Investigation Audit
$H_1 : \gamma_{11}$ ¹ 0	Independence has an influence on the Quality of Investigation Audit
Lisrel Result	$t_{value} = 8.75$ then **H_0 Rejected and H_1 Accepted**

This finding shows that independence has a considerable favorable impact on investigation audit quality. The results are in line with previous studies, that Independence positively influences the Quality of Investigation Audit (DeAngelo, 1981; Chang & Monroe, 2001; Jamal & Sunder, 2011; Rivaldi, et al. 2022).

2) Hypothesis 2: The Influence of Integrity on the Quality of Investigation Audit

$H_0 : \gamma_{21} = 0$	Integrity has no influence on the Quality of the Investigation Audit
$H_1 : \gamma_{21}$ ¹ 0	Integrity has an influence on the Quality of Investigation Audit
Lisrel Result	$t_{value} = 9.27$ then **H_0 Rejected and H_1 Accepted**

This finding demonstrates that integrity has a considerable favorable impact on the quality of investigation audits. The results are in line with previous studies, that Integrity positively influences the Quality of Investigation Audit (Broberg, 2013; Bouhawia, Irianto & Baridwan, 2015, Susilo & Widyastuti, 2015).

5. Conclusion

Based on the phenomenon, problem formulation, hypotheses, and the results of research conducted on BPK, conclusions can be drawn as follows: Independence directly has a positive influence on the quality of investigation audit, thus the higher the Independence can increase the Quality of Investigation Audit. The auditor's independence in preparing an investigative audit program, determining methodology and audit methods, and determining the scope of the audit in the investigative audit aided this influence; Integrity directly has a positive influence on the quality of the investigation audit, so the higher the Integrity can increase the Quality of Investigation Audit. This influence is supported by the attitude of an auditor who has the values of honesty and fairness, open-mindedness, and a willingness to complete work. This study recommends investigating auditors to provide space for auditors to determine the scope, methodology and audit procedures, as well as avoid conflicts of interest while performing their duties. In addition, ensuring that auditors are given the freedom to disclose irregularities, the value of state losses, and disclose fraud-related parties in the investigation audit report. In addition, it also encourages auditors to apply the values of honesty and fairness, has an open mindset, and increase the auditor's ability to adapt to the environment. In addition, encourages auditors to increase their willingness and commitment in carrying out investigation audit engagements.

References

Akbar, R. J. (2014). Sering Dikomplain Lambat Audit Kasus, Ini Alasan BPK [Often complained of being slow in case examination, this is the reason of BPK]. Through https://www.viva.co.id/arsip/527826-sering-dikomplain-lambat-audit-kasus-ini-alasan-bpk [Accessed 31/07/19].

Arens, A. A., Elder, R. J. & Beasley, M. S. (2012). Auditing and Assurance Services: An Integrated Approach. 14th edition. Pearson Education Limited, Edinburg. UK.

Arens, A. A., Elder R. J., Beasley, M. S. & Hogan C. E. (2017). Auditing and Assurance Services: An Integrated Approach. 16th edition. Pearson Education, Inc. USA.

Arrunada, B. (1999). The Economics of Audit Quality: Private Incentives and the Regulation of Audit and Non-audit Services. 1st edition. Kluwer Academic Publisher, Boston. USA.

Bouhawia, M. S., Irianto, G. & Baridwan, Z. (2015). The Effect of Working Experience, Integrity, Competence, and Organizational Commitment on Audit Quality (Survey State Owned Companies in Libya. *Journal of Economics and Finance*, 6(4), 60-67.

BPK. (2015). Rencana Strategis 2016-2020 [The 2016-2020 Strategic Plan].

Broberg, P. (2013). The Auditor at Work – A Study of Auditor Practice in Big 4 Audit Firms. Doctoral Thesis. Lund University. Sweden. https://portal.research.lu.se/ws/files/6086199/3634005.pdf [Accessed 30/08/19].

Chang, M. & Monroe, G. S. (2001). The Impact of Reputation, Audit Contract Type, Tenure, Audit Fees, and Other Services on Auditors Perceptions of Audit Quality. Working Paper at the University of Western Australia. Newlands, W.A 6907.

DeAngelo, L. E. (1981). Auditor Size and Audit Quality. Journal of Accounting and Economics, Vol. 3: 183-199.

Edj. (2009). BPK Dilaporkan Ke Mabes Polri [BPK Reported to Police Headquarters]. Through https://nasional.kompas.com/read/2009/12/22/1333133/BPK.Dilaporkan.Ke.Mabes.Polri [Accessed 30/07/2019].

Elliott, R. K. & Jacobson, P. D. (1998). Audit Independence Concepts. *The CPA Journal*, 68, 12.

Fat. (2010). Dua Auditor BPK Jabar Divonis Empat Tahun Penjara [Two West Java BPK Auditors Sentenced to Four Years in Prison]. Through https://www.hukumonline.com/berita/baca/lt4cd784ca11ac3/dua-auditor-bpk-jabar-divonis-empat-tahun-penjara [Accessed 31/07/19]

Francis, J. R. (2004). What Do We Know About Audit Quality? *The British Accounting Review*, 36, 345-368.

Francis, J. R. (2011). A Framework for Understanding and Researching Audit Quality. *A Journal of Practice & Theory*, 30(2), 125-152.

FRC, (Financial Reporting Council). (2008). The Audit Quality Framework. Through https://www.frc.org.uk/getattachment/46582304-32b1-43bb-b614-90318b295f28/The-Audit-Quality-Framework-Feb-2008.pdf [Accessed 01/08/19].

GAO, (US. Government Accountability Office). (2003). Public Accounting Firm. Report No.GAO-03-864. Through https://www.gao.gov/new.items/d03864.pdf [Accessed 31/07/19].

Gabrillin, A. (2018). Auditor BPK Sigit Yugoharto Divonis 6 Tahun Penjara [BPK Auditor Sigit Yugoharto Sentenced to 6 Years in Prison]. Through https://nasional.kompas.com/read/2018/06/07/20481481/auditor-bpk-sigit-yugoharto-divonis-6-tahun-penjara [Accessed 31/07/19].

Gul, F. A., Wu, D. & Yang, Z. (2011). Do Individual Auditors Affect Audit Quality? Evidence from Archival Data. *THE ACCOUNTING REVIEW American Accounting Association,* 88(6). https://dx.doi.org/10.2139/ssrn.1888424

Hair, J. F., Sarstedt, M., Hopkins, L. & Kuppelwieser, V. G. (2014). Partial Least Squares Structural Equation Modeling (PLS-SEM): An Emerging Tool in Business Research. *European Business Review*, 26(2), 106–121.

Hayes, R., Dassen, R., Schilder, A. & Wallage, P. (2005). Principles of Auditing: An Introduction to International Standards on Auditing (2nd edition). Pearson Education, Essex. England.

ICAEW, (The Institute of Chartered Accountants in England and Wales). (2007). Reporting with Integrity Information for Better Markets Initiative. Through https://www.icaew.com/-/media/corporate/files/technical/ethics/reporting-with-integrity-report.ashx [Accessed 31/07/19].

IESBA, (International Ethics Standards Board for Accountants). (2014). Handbook of the Code of Ethics for Professional Accountants. Through http://iaiglobal.or.id/v03/files/ file_berita/2014-IESBA-Handbook.pdf [Accessed 31/07/2019].

Jamal, K. & Sunder, S. (2011). Is Mandated Independence Necessary for Audit Quality? *Accounting Organization and Society*, 36(4-5), 284-292.

Knechel, W. R., Krishnan, G. V., Pevzner M., Shefchik L. B. & Velury, U. K. (2012). Audit Quality: Insights from The Academic Literature. Auditing: *A Journal of Practice & Theory*, 32(1), 385-421.

Lee, S., Su, J. & Tsai, S. et al. (2016). A Comprehensive Survey of Government Auditors' Self-efficacy and Professional Development for Improving Audit Quality. *Springer Plus,* 5, 1263. https://doi.org/10.1186/s40064-016-2903-0

Lestari, D. (2012). AUDIT HAMBALANG: Menkeu Kaget, Fakta & Kesimpulan Tak Sinkron [HAMBALANG AUDIT: Minister of Finance Shocked, Facts & Conclusions Not Synchronized]. Through http://kabar24.bisnis.com/read/20121102/79/102786/audit-hambalang-menkeu-kaget-fakta-and-kesimpulan-tak-sinkron [Accessed 30/07/19].

Louwers, T. J., Ramsay, R. J., Sinason, D. H. & Strawser J. R. (2008). Auditing and Assurance Services. 3rd Edition. McGraw-Hill Companies, Inc. New York.

Mautz, R. K. & Sharaf, H. A. (1993). The Philosophy of Auditing, American Accounting Association, Florida.

Messier, G. & Prawitt. (2008). Auditing and Assurance service, a systematic approach. 6th edition. McGraw Hill. USA.

OECD, (Organization for Economic Co-operation and Development). (2009). Components of Integrity: Data and Benchmarks for Tracking Trends in Government. Global Forum on Public Governance

Patrick, Z., Vitalis, K. & Mdoom, I. (2017). Effect of Auditor Independence on Audit Quality: A Review of Literature. *International Journal of Business and Management Invention*, 6(3), 51-59.

Republik of Indonesia. (1945). Undang-Undang Dasar 1945 [The 1945 Constitution].

Republic of Indonesia. (2004). Undang-Undang Nomor 15 Tahun 2004 tentang Pemeriksaan Pengelolaan dan Tanggungjawab Keuangan Negara [Law No.15 of 2004 about Examining Management and Responsibility of State Finance].

Republic of Indonesia. (2006). Undang-Undang Nomor 15 Tahun 2006 tentang Badan Pemeriksa Keuangan [Law No.15 of 2006 about The Audit Board].

Rittenberg, L. E., Johnstone, K. M. & Gramling, A. A. (2010). The Public Accounting Profession: Auditing, A Business Risk Approach. 7th edition. South Western Cengage Learning, Mason. USA.

Rivaldi, A., Aswar, K., Taufik, T., Andreas, A. & Hariyani, E. (2022). Factors affecting audit quality: The moderating effect of dysfunctional behavior. *Universal Journal of Accounting and Finance*, 10(1), 358-366.

Sasongko, J. P. (2016). Pakar: Tak Ada 'Second Opinion' dalam Audit Investigasi BPK [Expert: There is no 'Second Opinion' in the BPK Investigation Audit]. Through https://www.cnnindonesia .com/nasional/20160416140940-12124341/ pakar-tak-ada-second-opinion-dalam-audit-investigasi-bpk [Accessed 30/07/19].

Sekaran, U. & Bougie, R. (2013). Research Methods for Business A Skill-Building Approach. 6th Edition. Chichester, West Sussex: Wiley.

Sembiring, L. J. (2017). PIDATO PRESIDEN: Dipuji Jokowi, Ini yang Telah Dilakukan Badan Pemeriksa Keuangan [PRESIDENTIAL SPEECH: Jokowi praised, this is what the Audit Board has done]. Through https://economy.okezone.com/read/2017/ 08/16/20/1756855/pidato-presiden-dipuji-jokowi-ini-yang-telah-dilakukan-badan-pemeriksa-keuangan [Accessed 31/07/19].

Susilo, P. A. & Widyastuti, T. (2015). Integritas, Objektivitas, Profesionalime Auditor dan Kualitas Audit di Kantor Akuntan Publik Jakarta Selatan [Integrity, Objectivity, Auditor Professionalism and Audit Quality in South Jakarta Public Accounting Firm]. *Jurnal Riset Akuntansi dan Perpajakan,* 2(1), 65-77.

Sutiawan, I. (2018). Syafruddin Nilai Audit BPK untuk Perkaranya, Menyimpang [Syafruddin, the BPK Audit Value for His Case, Deviated]. Through https://www.gatra.com/rubrik/ nasional/323424-Syafruddin-Nilai-Audit-BPK-untuk-Perkaranya-Menyimpang [Accessed 30/07/19].

Tanauma, R. (2012). Bahar dan Munzir Jalani Sidang Putusan [Bahar and Munzir Underwent a Judgment Session]. Through http://manado.tribunnews.com/2012/05/21/ bahar-dan-munzir-jalani-sidang-putusan [Accessed 31/07/19].

Wijanto, S. H. (2015). Metode Penelitian Menggunakan Structural Equation Modelling dengan Lisrel 9 [Research Methods Using Structural Equation Modeling with Lisrel 9]. Jakarta: Lembaga Penerbit Fakultas Ekonomi Universitas Indonesia.

Whittington, O. R. & Pany, K. (2011). Principles of Auditing and Other Assurance Services. 18th edition. The McGraw-Hill Companies Inc., International Edition. New York.

Information Management and Business Review (IMBR)
Vol. 14, No. 2, June 2022 (ISSN 2220-3796)

Key Factors to Increasing Free Cash Flow for Manufacturers Utilizing Lean Production: An AHP-DEMATEL Approach

Cathay Kuo-Tai Kang[1], Chieh-Yu Lin[2]* & Yi-Hui Ho[3]
[1]Program in Business and Operations Management, Chang Jung Christian University, Tainan, Taiwan
[2&3]Department of International Business, Chang Jung Christian University, Tainan, Taiwan
kangcathay@gmail.com, jylin@mail.cjcu.edu.tw, vicky@mail.cjcu.edu.tw

Abstract: This paper aims to apply AHP and DEMATEL to analyze the key factors and interrelationships of lean production to increase free cash flow for manufacturers. The AHP hierarchy was determined through literature and interviews with leading management experts. The assessment criteria were categorized into five major criteria and 15 sub-criteria, including production, sales, human resources, R&D, and finance. According to the AHP results, the first eight key factors were identified as the key factors to increasing cash flow for manufacturers who utilized lean production. DEMATEL was used to identify the interactions among the eight key factors and further identify the four more important ones. The four key factors are strategic planning, strategic deployment, leadership, and goal orientation. This paper proposes management implications and improvement suggestions for the four key factors and their interactions.

Keywords: *Lean Manufacturing, Key factors, Free cash flow, AHP, DEMATEL.*

1. Introduction

The concept of free cash flow was first introduced by Jensen in 1986 and is defined as the excess of protected assets and cash needed to finance new investments (Jensen, 1986, Richardson, 2006). Whether a company is healthy can be seen from the free cash flow (Oktariyani & Hasanah, 2019). Financial competitiveness is an extension of the core competitiveness theory from a financial perspective (Liu, Yu, Zhang, Xu, & Jin, 2021). The relationship between free cash flow and profitability is positively significant. A surge in free cash flow leads to a relative increase in the firm's profitability, which can be achieved through investment. There is a positive correlation between free cash flow and the profitability of listed companies (Hubbard, 1998, Afiezan, Wijaya, Priscilia, & Claudia, 2020). Managers can contribute to the company's growth through the free cash flow they are allowed to enter into the production of new products or services, as well as investments with positive net present value, relying on the company to implement lean manufacturing to reduce costs and generate profits (Mulugeta, 2021).

Management accounting consists of cost accounting (ABC) and production accounting, where "cost" is defined as the cost of resources used to produce products or services and sales (Al-Dhubaibi, 2021). The main advantage of this calculation method is that it allows controlling costs by comparing standard and actual values of calculations and reacting quickly and taking action in the production phase (Zaika & Vylegzhanina, 2017). Costs are closely related to production efficiency and can lead to significant company profitability and performance with more free cash flow; finance managers and operations managers need to consider management accounting for management (Ribalko, Varlamova & Yevtushenko, 2021). Lapsley and Rekers (2017) conclude that for management accountants to play a role in strategy formulation, they need to go beyond the boundaries of the accounting function and interact or communicate with individuals from other functions and companies in the supply chain. Cash flows received from operating activities, product sales, engineering results, services, and the related net income are the main conditions.

To ensure the flow of funds and the continuity of economic activities (Soboleva, Matveev, Ilminskaya, Efimenko, Rezvyakova & Mazur, 2018). The integration of 4.0 with business has influenced accounting science, cost accounting, and management accounting (Kablan, 2020). Taylor, the father of scientific management, introduced "The Principles of Scientific Management" (Jacobs, Chase & Aquilano, 2004) in the last century, which has evolved into today's issues of organizational division of labor, traditionally based on business functions (production management, marketing management, human resources management, and lean talents). The traditional division of labor according to corporate functions (production management, marketing management, human resource management, research and development, financial management)

(Jacobs, Chase & Aquilano, 2004; Fang, Tsai, Tsai, 2019). Since many assessment components and structural criteria are key factors in the study of lean management for growing free cash flow (FCF).

Such as production management, marketing management, and other related assessment criteria, cover a wide range of levels and are complex in scope, and fall under the scope of Multi-criteria Decision-making (MCDM). The Analytic Hierarchy Process (AHP) is a systematic approach to complex problems, which is suitable for decision-making problems with multiple attributes in uncertain situations (Saaty, 1988). However, the interactions are uncertain, so this paper uses DEMATEL to explain the interactions and dependencies (Kilic, Yurdaer & Aglan, 2021; Mubarik, Kazmi & Zaman, 2021). This study was conducted to answer the above key factors of growth free cash flow (FCF) and to introduce a set of criteria for evaluating growth FCF by using AHP-DEMATEL to investigate the proportion of key factors of growth FCF, their relative importance, and their interactions and dependencies.

This study collected domestic and international academic literature on the factors influencing corporate functions. We then used expert interviews to obtain the appropriate assessment constructs and criteria for this study on corporate functions. In general, the purpose of this study is to use the AHP-DEMATEL computational model and the empirical study of lean factory operations to evaluate the key indicators of each function and their interactions and dependencies to increase the cash flow of the enterprise. This research framework is divided into five sections. Aside from this first section, the second section reviews the literature and the development of the management function evaluation criteria and the influencing factors, the third section introduces the AHP and DEMATEL research methods, the fourth section conducts the empirical analysis, and the fifth section presents the conclusions and recommendations as to the final chapter.

2. Literature Review

Taylor, the father of scientific management, introduced The Principles of Scientific Management in the last century. Lean Manufacturing/Management (LM) is a philosophy that involves the use of a set of tools in operational processes to optimize people, time, assets, and productivity while maintaining the quality of products and services as a competitive advantage for business entities to improve competitive performance (Ibrahim, 2021). LM is a philosophy that involves using a set of tools in the operational process to optimize people, time, assets, and productivity while maintaining the quality of products and services, a competitive advantage for business entities to improve their competitive performance (Ibrahim, 2021). These factors were analyzed to understand the financial competitiveness of Indian automobile companies: asset utilization, cost-effectiveness, market value, foreign trade, liquidity, market value, productivity, profitability, solvency, value-added performance, and working capital efficiency. Using factor analysis, financial competitiveness was measured using 13 indicators such as cash flow capability, development capability, operational capability, profitability, and solvency (Liu, Yu, Zhang, Xu, & Jin, 2021). The corporate functions include the division of labor in the areas of operation management, marketing management, human resource management (lean talents), R&D (lean Kaizen R&D), and financial management (Fang, Tsai, & Tsai, 2019).

Operation Management: Operations management is a very important part of management today, especially in industrial enterprises (Touriki, Benkhati, Kamble & Belhadi, 2021). Many organizations conduct strategic planning to systematically assess and evaluate their current state, establish or update their mission and objectives, and identify strategies and activities to achieve their goals (Harvey, Gapstur, Pottinger, Elena & Helzlsouer, 2021). Strategic planning (SP) impacts business development and performance (Al-Qershi, 2021). It is a formal, ongoing process for setting goals and implementing actions to position the organization in the marketplace while matching available sources with market opportunities. Ultimately, a strategically oriented organization can connect the past with the present and anticipate the future, aligning its actions with the realities of the operating environment (Thomas, 2021). New Product Development (NPD) selects products based on a wide range of business and technical needs, followed by physical prototyping, testing and validation, volume production, and finally, product release (Ulrich & Eppinger, 2012). One of the basic conditions for the company's development and long-term success is innovation (Świąder & Marczewska 2021). NPD is based on customized modeling and programs supported by appropriate tools; therefore, it brings significant benefits in terms of production costs, product quality, and supply chain availability, which are crucial for success, business development, and efficiency (Azanedo, Garcia-Garcia, Stone & Rahimifard,

2020). The function of quality assurance in the production process is to ensure that when errors and defects are detected in the production process, they are corrected in the production process as quickly as possible.

The correlation with production conditions is known from the analysis of poor quality, and the analysis of the problem can lead to corrective measures (Elkaseer, Mueller, Charles & Scholz, 2018, Samuel, Rajesh, Rajanna & Franklin, 2021). Using experimentally validated simulations, the process parameters are studied first, and the information is useful to significantly reduce the need for failure validation analysis after production (Dong, Liu, Wen, Ge, & Liang, 2019). This is what we call "built-in quality"; the quality elements faced during production are already taken into account in the product development process, and anti-defective measures are put in place to realize that quality is continuously established from product development to production. The quality mindset of the developers is an important key for the organization and the application of different quality methods and tools (Saleh, 2020). The Operations Manager is responsible for allocating departmental resources throughout the company to achieve profitable and efficient operations. By participating in meetings to provide strategic guidance to the organization, they work with plant quality managers to ensure that quality requirements align with market demands (Wolniak, 2019; Susilawati, 2021). We can define operations management as the fundamental role in the company is the transformation of inputs such as raw materials into finished products and services (Domingues & Machado, 2017, Fiorentino, 2016). The final realization of the operational function is responsible for producing products and providing services (Wolniak, 2019; Wolniak, Skotnicka-Zasadzień, Zasadzień, 2017).

Marketing Management: The beginning of business operations began with the Voice of the Customer, a term that emerged in (Griffin & Hauser, 1993). A customer-oriented approach is integral to corporate culture in the next generation of system standards. The customer-centric approach is a component of corporate culture, and in the new generation of system standards, the customer organization's customer-centricity is emphasized (Samuel, Rajesh, Rajanna & Franklin, 2021). There are different types of customers: new and unchanging, random and loyal, potential and followers, and each type of customer contributes differently to total revenue, but they are all equally important (Linde & Philippov, 2021). Quality Function Deployment (QFD) is the systematization of listening to the "voice of the customer" and translating customer needs through each stage of product development into products that meet customer requirements is a necessary condition; through QFD, We analyze customers' needs, make technical responses, make the supply sequence to the market the priority, train professionals in their respective positions, and improve the quality of human resources (Pandya, Ismoyowati & Suharno, S., 2020). The customers are concerned about quality, delivery, and price. Good quality depends on detailed SOPs to provide more consistent products and quality and better service (Samuel, Rajesh, Rajanna & Franklin, 2021). It is necessary to have an ongoing dialogue with customers on the subject of research and to inform them about how the findings will be used.

To improve the quality of product features or specific services (Linde & Philippov, 2021; Attaqwa, Saputra & Khamal, 2021). The Just in Time (JIT) supply chain has attracted increasing interest from operations management scholars (Tseng, Wee, Reong & Wu, 2019; Chung, Talluri, Kovács, 2018; Yao & Hsu, 2018). JIT provides companies with numerous advantages, including reduced costs, reduced inventory, improved product quality, shorter lead times, increased responsiveness, reduced waste, increased customer satisfaction, and superior competitive advantage (Heizer, Render & Munson, 2016; Mas'udin & Kamara, 2018; Dieste, Panizzolo & Garza-Reyes, 2021). Finally, the fulfillment of the promise to the customer, the customer value proposition (CVP) is a strategic tool that companies use to communicate how they aim to deliver value to their customers as one of the most widely used terms in business (Payne, Frow and Eggert, 2017; Hao, Liu & Goh, 2021). The concept of a quality-expanding CVP company should include listening to the customer, a just-in-time supply chain, full participation in the company products that satisfy the quality of the customer expectations finally meeting the promise of delivery to the customer (Becerra-Fernández, Herrera, Trejos, & Romero, 2021, Kim, Montreuil & Klibi, 2022). Hamadamin & Singh (2019) found that most respondents believe that marketing strategies to deliver on promises are key to the success of all companies and an important tool for increasing customer satisfaction (Kim, Montreuil & Klibi, 2022).

Lean Talents: Execution determines the success or failure of a company. The need for companies to transform to Industry 4.0 manufacturing, production, and operations management in a realistic

manufacturing environment, especially in production planning, scheduling, execution, and control; and to achieve competitive advantage in cost, efficiency, and quality (Guo, Li, Zhong & Huang, 2021) is dependent on competent executives. The magic of a company's success is not in the philosophy, tools, and technology but rather in the people who perform (Karekatti, 2021). In a professional work environment, any education and improvement are about people because they are the ones who bring about the needed change by being the change agents (Gao, Wang, Wang, Ma & Li, 2022). Talent's echelon building (TEB) includes popularizing lean concepts and building a talent echelon pool. Talent development should focus on the process and the results expressed in performance; the process is the means, and performance metrics provide feedback to people (Jing, Tang & Yan, 2018). Talent acquisition is a strategic approach to identifying, attracting, and acquiring the best talent to effectively and efficiently meet dynamic business needs (Budianto, Surachman, Hadiwidjojo & Rofiaty, 2021). The implementation of TPS focuses on the manufacturing priorities of safety, quality, delivery, and cost. Unlike traditional manufacturing plants that start with cost reduction, TPS aims to increase efficiency and reduce costs by implementing JIT production and kanban control systems (Sugimori, Kusunoki, Cho & Uchikawa, 1977).

The goal of the lean enterprise is to improve the efficiency of the entire enterprise while providing the necessary quality and ideal personalized products to consumers in the shortest possible time (Palange & Dhatrak, 2021; Maware, Okwu & Adetunji, 2021). According to Henao, Sarache & Gómez (2019), adopting both JIT and Total Quality Management (TQM) requires social systems to develop skills and desired levels of worker participation to avoid harmful consequences to operational and safety performance. The combination of lean practices, JIT and TQM, improves operational performance by supporting goal-oriented practices that improve the ability to address changes that affect quality, delivery, flexibility, or cost. The main pillars in marketing content marketing (CM), including the relationship between content, customer engagement, and the enterprise's marketing objectives and their subfactors, are illustrated in this goal-oriented model (Yaghtin, Safarzadeh & Zand, 2020). It is important to continuously improve all business processes in a lean enterprise to avoid waste through strategic deployment (PD) matrix management. Therefore, process orientation should be based continuously and requires an integrated approach to collaborate in an evolving organization and its processes. The dynamic integration of all processes can be accomplished by applying strategic deployment (PD) matrix management (Mohanty & Pradhan, 2020; Womack & Jones, 1996). In addition to the above, the application of strategic deployment (PD) matrix management can also be used to integrate the organization and its processes.

Lean Kaizen R&D: The Japanese word KAIZEN stands for two levels: Kai for change and Zen for better, so Kaizen means "continuous improvement"; the KAIZEN approach is based on three pillars that are best suited for continuous improvement management, involving every process, function, and person in the company" (Kumar, Dhingra & Singh, 2018, Choudhary, Nayak, Dora, Mishra & Ghadge, 2019). Castillo (2022) states that the Lean production system (LPS) needs a tool called Value Stream Mapping VSM to evaluate its effectiveness in improving sustainable performance. There is an opportunity to use VSM to identify improvement points for waste and problems (Castillo, 2022). The practice of VSM management must break away from the traditional management structure and create a lean organization that comprehensively considers all processes throughout the value stream. Through this detailed process orientation, all participants in the entire value chain can be linked together. Traditional management will face a major challenge because traditional rigid organizations cannot communicate correctly and quickly through all value processes (Mohanty & Pradhan, 2020). In short, the overall structure needs to be aligned with the company's cultural, ecological, and social goals (Hernandez-Matias, Ocampo, Hidalgo & Vizan, 2020, Hernandez-Matias, Ocampo, Hidalgo & Vizan, 2020).

All organizations aim for success, and it is impossible to manage the lean level of the organization and grow free cash flow without measuring the organization's performance (Abreu & Calado, 2017). Achieving a lean transformation in an organization must begin at the leadership level to be successful (Netland, Powell & Hines, 2020). Senior executives motivate the entire workforce to participate and teach by example with their active participation in the improvement and work with employees to create systematic ways of working, presenting lean transformation and continuous improvement (Antony & Gupta, 2019). There is a positive relationship between leadership development and operational performance, which should be interpreted as an incentive for managers when deciding whether to invest in developing the capacity to implement a lean

production system (LPS) (Seidel, Saurin, Marodin & Ribeiro, 2017). Management commitment and engagement remain the most frequently cited critical success factors for Lean implementation in the literature (Antony & Gupta, 2019, Antony & Gupta, 2019). Leaders take the lead in encouraging shop floor workers to drive continuous Lean improvement, thus describing the importance of shop floor workers using the oft-quoted Toyota principle: "Before we build cars, we build people" (Ohno, 1988; Liker, 2004).

Lean management, also known as lean thinking or the Toyota Production System (TPS), is a production strategy developed by Taichi Ohno in the 1950s. The goal of lean management is a culture of continuous improvement through a requirement for production processes and procedures to improve by as little as 1% per day and a culture of operational excellence using standardization and oriented worker participation (Womack & Jones, 1996). Rapid Mass Engagement Process (RME), where employees are fully engaged, and task forces are formed to complete the improvement ideas provided by employees in a time-bound manner. Otherwise, it is just "pseudo-engagement" (Devine, 2016). Employee engagement and participation are fundamental to reaping the full benefits of TPS implementation (Liker, 2004). Vries and Poll (2018) found that the more progress is made in lean processes, the more engagement and participation there is, resulting in more teamwork. 15 of the 19 lean techniques have a very significant positive coefficient. People engage because they expect to have a better understanding and progress. They improve through 5-S and Kaizen team participation; the more they learn, the more they participate in team meetings.

Financial Management: Lean concepts have proven their effectiveness in improving the operational performance of companies, and lean programs can improve financial performance indicators. A bundle of JIT and TQM lean practices is recommended as the best enabler of financial performance in terms of sales and profitability, manufacturing and the operational and financial performance of the company (Kim, Montreuil & Klibi, 2022, (Dieste, Panizzolo & Garza-Reyes, 2021). Lean bundles (just-in-time, total quality management, and human resource management practices) and manufacturing servitization have independent and complementary effects on sustainable performance (Hao Liu & Goh, 2021). Since the 1960s, Japan has also proposed a system similar to the Balanced Scorecard BSC as a well-integrated system for deploying lean strategies. The system was named Hoshin Kanri (Policy Management HK) and has been implemented by companies worldwide as an important component of lean transformation strategies (Chiarini & Vagnoni, 2016; Vries and Poll, 2018). The company uses PD (strategic deployment) and DM (daily management), Quality Insurance (QI) stories, and simple Quality Control (QC) tools. The interdependencies between the functions of each project are mapped as part of the stakeholder management process, and relevant resources become part of the core project and support team. The team is asked to set stretch goals for each project as part of the vision of the World Class Organization (WCO), with the key tool being PD (Strategic Deployment) (Sachdev & Agrawal, 2017). In performance management, the Balanced Scorecard (BSC) has a key assumption that each performance measure is part of a balanced cause-effect relationship.

Where leading measures drive lagging measures. By tracking the company's progress against these measures, managers and employees can accomplish the company's mission by identifying and correcting underperforming perspectives (Kaplan & Norton, 1996). The Balanced Scorecard (BSC) is one of the most common financial management metrics used by small, medium, and large companies (Cooper, Ezzamel & Qu, 2017). It helps companies to measure the progress of their performance goals and to be able to make decisions and improvement plans regarding the company's strategies and activities (Susilawati, 2021). People are the company’s most important resource to accomplish financial management indicators. The strengthening of financial management combined with the most important competencies of business managers is the result of the strong reality of practical experience. Within the rule of thumb, the rise and improvement techniques of the manipulation and execution of people to the group and the enterprise. The primary goal in strategic monetary control is the rule of the organization manager, so the right to adopt the appropriate strategy during the most tolerable economic downturn and get the group into an emergency financial degree and prosperity throughout the danger depends on the executive power of managers (Kembauw, Munawar, Purwanto, Budiasih & Utami, 2020). Human resources are the study of people. Employees are the assets of any company, and employees improve the efficiency and performance of the company; obtaining strategic human resources practices is essential to ensure that the organization's performance reaches its peak (Al-Khaled & Fenn, 2020, Al-Qershi, 2021).

Evaluation Criteria of Key Factors: The following table will use these five aspects of the study as a basis to further explain the criteria and increase the perspective of this paper. The following table summarizes the evaluation matrix, criteria and index descriptions, and references, as shown in Table 1.

Table 1: Key Factors to Increasing Free Cash Flow for Lean Production

Factors	Sub-Factors	Descriptions	References
A Operation Management	A_1 Strategic Planning	The organization conducts strategic planning through systematic evaluation, evaluates its current status, establishes or updates its mission and goals, and identifies strategies and activities to achieve the goals to improve the sustainable development and performance of the enterprise.	(Harvey, Gapstur, Pottinger, Elena & Helzlsouer, 2021), (Al-Qershi, 2021), (Thomas, 2021)
	A_2 New product planning	Innovative product design solutions are selected for the company's development and benefits, and products are released based on a wide range of business and technical requirements. This process brings significant benefits regarding production costs, product quality, and supply chain.	(Ulrich & Eppinger, 2012) ; (Świąder & Marczewska, 2021), (Azanedo, Garcia-Garcia, Stone & Rahimifard, 2020)
	A_3 Quality is built into the process.	The so-called "built-in quality" is the quality that is continuously established during the product development process. To prevent errors and defects in the production process, the three no's of quality are: Do not accept defective materials. Do not manufacture defective products. Do not deliver defective products. This ensures that no defective products are exported.	(Elkaseer, Mueller, Charles & Scholz, 2018), (Samuel, Rajesh, Rajanna & Franklin, 2021), (Saleh, 2020)
B Marketing Management	B_1 Quality first	Through QFD analysis techniques and consistent SOPs, training is conducted in respective positions to improve human resources, control process quality, and ensure product quality.	(Samuel, Rajesh, Rajanna & Franklin, 2021), (Pandya, Ismoyowati and Suharno, 2020), (Attaqwa, Saputra, & Khamal, 2021)
	B_2 Fulfill promise	A marketing strategy that delivers on its promise is key to the success of any business and is an important means of increasing customer satisfaction. The Customer Value Proposition (CVP) is a company's strategic tool to communicate value to its customers.	(Payne, Frow and Eggert, 2017); (Hao, Liu & Goh, 2021), (Becerra-Fernández, Herrera, Trejos & Romero, 2021); (Kim, Montreuil & Klibi, 2022)
	B_3 On-time delivery	The JIT supply chain provides companies with numerous advantages, including lower costs, lower inventories, higher product quality, shorter lead times, higher response times, higher customer satisfaction, and superior competitive advantages.	(Heizer, Render & Munson, 2016); (Dieste, Panizzolo & Garza-Reyes, 2021), (Tseng, Wee, Reong & Wu, 2019)
C Lean Talents	C_1 Executive ability	Only with top-notch execution capabilities can we execute our strategy well. The magic of TPS's JIT production is not in the philosophy, tools, and technology but in the execution of the people involved. Management must share their passion for execution.	(Guo, Li, Zhong & Huang, 2021), (Karekatti, 2021)

	C_2 Goal-oriented	The goal of the lean enterprise is to improve cost efficiency. Combining JIT and TQM to support goal-oriented practices improves the ability to address changes that affect quality, delivery, flexibility, or cost, thereby improving operational performance.	(Palange & Dhatrak, 2021). (Maware, Okwu, & Adetunji, 2021), (Henao, Sarache & Gómez, 2019)
	C_3 PD matrix management	Applying Strategic Deployment (PD) matrix management to accomplish organizational growth, you can clearly understand the 3-5 year plan, first-year goals and priorities, and who is responsible for completing improvements within the scheduled time frame.	(Mohanty & Pradhan, 2020); (Womack & Jones, 1996)
	D_1 Lean Organization	Creating a lean organization takes full account of all the processes in the entire value stream. All participants in the entire value chain can be linked together. The business structure of a lean organization includes a lean development system, a lean manufacturing system, lean sales and service system, and a lean leadership and culture.	(Mohanty & Pradhan, 2020), (Hernandez-Matias, Ocampo, Hidalgo & Vizan, 2020)
D Lean Kaizen R&D	D_2 Leaders take the lead.	Management commitment and engagement continue to be the most frequently cited critical success factors for Lean implementation in the literature. The goal of a Lean program is to lead leadership to instill a culture of continuous improvement in the organization so that the company becomes better every day. Successfully achieve Lean Transformation.	(Netland, Powell & Hines, 2020), (Antony & Gupta, 2019), (Ohno, 1988) ; (Liker, 2004)
	D_3 Full participation	The more employees are involved in the Lean process, the more progress will be made. Employee engagement is fundamental to a company's desire to improve efficiency and benefit from TPS implementation. Effective use of many TPS tools (such as eliminating the eight types of waste) generates more teamwork.	(Womack & Jones, 1996), (Devine, 2016), (Liker, 2004)
	E_1 Strategic deployment	The Hoshin Kanri (Policy Management-HK) process with policy deployment is an important component of developing a Lean transformation strategy. A lean team is established by top management to solve problems based on continuous improvement (CI), jointly set team goals, and practice organizational change management.	(Chiarini & Vagnoni, 2016), (Vries and Poll, 2018), (Sachdev & Agrawal, 2017)
E Financial Management	E_2 People are the most important resource.	People are the most important resource in a business because they are the core of any organization. It is vital to ensure that organizational performance is at its peak. The oft-quoted Toyota principle: "Before building cars, build people."	(Al-Khaled & Fenn, 2020), (Kembauw, Munawar, Purwanto, Budiasih & Utami, 2020)
	E_3 Performance management	The Balanced Scorecard (BSC) framework comprises four perspectives - financial, customer, internal processes, and learning and growth. Based on Key Performance Indicators (KPIs), these balanced cause-and-effect measures are used to track the company's progress. Managers and employees can accomplish	(Kaplan & Norton, 1996). (Cooper, Ezzamel & Qu, 2017), (Susilawati, 2021)

	the company's mission by identifying and correcting underperforming perspectives.

3. Research Method

The AHP Technique: Since many evaluation structures and evaluation criteria are key factors to increasing free cash flow for manufacturers who apply them in a sophisticated manner, such as operations management and marketing management, they cover a wide range of levels and are complex in scope, and fall under the scope of Multi-criteria Decision-making (MCDM). The Analytic Hierarchy Process (AHP) is a method of systematizing complex problems, which is very suitable for decision-making problems with uncertainty and multiple attributes (Saaty, The Analytic Hierarchy Process, 1980). Therefore, this study is one of the main motives of this study to answer the above-mentioned free cash flow growth problems and to introduce a set of criteria for evaluating free cash flow growth to investigate the relative importance of the key factors of free cash flow growth for manufacturers who apply the lean operation, further to investigate the key factors of free cash flow growth. Figure 1 shows the hierarchical structure of the key factors for the success of free cash flow management at the lean operation level.

Figure 1: Hierarchical Structure

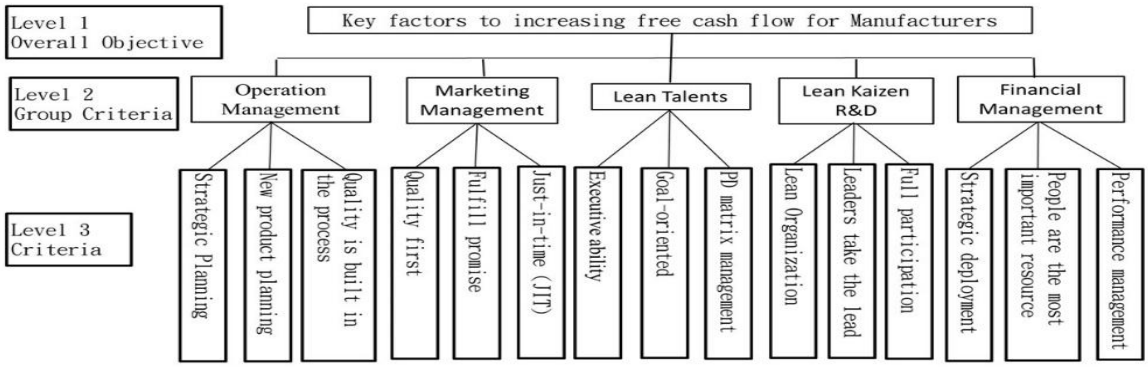

AHP [13] is an MCDM method proposed by Professor Thomas Saaty at the University of Pennsylvania in the 1970s and developed at the University of Pittsburgh in the 1980s (Saaty, The Analytic Hierarchy Process, 1980). Over the past 30-40 years, research using AHP has appeared frequently in academic journals. The method has been applied in many applications and d to management practices in many contexts. For example, AHP has been applied to environmental sustainability assessment (Zhang & Chen, 2017; Park, Lee & Lee, 2020), supplier selection (Nagy, Ruppert & Abonyi, 2020, Çalık, 2021), strategic planning assessment (Basset, Mohamed, Sangaiah & Jain, 2018, Chiarini, 2019), e-commerce (Rouyendegh, Topuz, Dag & Oztekin, 2019, Sun & Li, 2020), Internet of Things (IoT) (Durão, Carvalho & Takey, 2018, Mashal, Alsaryrah, Chung & Yuan, 2019), inventory management (Vergara, Sánchez, Poveda-Bautista & Diego-Mas, 2020; (Nariswari, Bamford & Dehe, 2019) and risk factor assessment (Tseng, Ding & Chen, 2018; Tseng, Wee, Reong & Wu, 2019).

The objective of the AHP method is to systematize complex questions by arranging the assessment dimensions of each question in a hierarchical framework and using the framework to distinguish different levels at which pairwise comparisons can be performed. In AHP, the factors and levels of analysis have the following characteristics (Vargas, 1990): intercomparison, independence, homogeneity, and expectation. The structure of an MCDM problem usually consists of objectives, criteria/sub-criteria, and alternatives, and the number of levels depends on the problem's nature and the analysis's depth (Ding & Liang, 2004). According to (Saaty, The Analytic Hierarchy Process, 1980), the number of evaluation criteria to be matched at any level should not exceed seven. After all, levels have been constructed; the standards for each level must be compared to the standard or target level above as the assessment standard. If there are n standards, then n(n-

1)/2 pairwise comparisons must be performed. Since pairwise comparisons constitute a valid cohesive judgment method, this study uses AHP to determine the relative weights of assessment criteria.

An AHP questionnaire is administered to assess the relative importance of factors affecting growth FCF for studying key growth FCF metrics for manufacturing companies that apply precision in ranking key growth FCF metrics. A hierarchical structure was constructed using five assessment dimensions and 15 evaluation criteria, as shown in Figure 1. In addition, Table 1 was also used to design the questionnaire to obtain the relative weights of all assessment dimensions and criteria. We invited experts with more than 15 years of experience in different manufacturing industries to complete an AHP expert questionnaire. The questionnaire survey period was three months. Of the 30 questionnaires distributed, five were not returned during the survey period, and 4 of the remaining 25 did not pass the consistency test. There were 21 valid questionnaires remaining (70% validity rate). The demographic profile of these experts is listed in Table 2.

We applied the operational steps of AHP, and the results of the 21 valid questionnaires were calculated in agreement with the two-comparison judgment. The consistency index (CI) and consistency ratio (CR) values were less than equal to 0.1 or less. Robbins (1994) suggests that 5-7 individuals are the optimal number of experts to participate in group decision-making. This suggests that the number of valid questionnaires in this study is representative of the results. In addition, the results of the eigenvalue, CI, and CR values of the 21 valid questionnaires are provided in this paper, as shown in Table 1. After coding the valid questionnaires and aggregating expert opinions, the operational steps of the AHP method were conducted to finally obtain the weights of the evaluation criteria at each level. These results provide an understanding of the relative importance of the evaluation dimensions and criteria.

Table 2: Demographic Profiles of Experts

Seniority	Position	Number of Experts	Industry
21 and above	General Manager, Deputy General Manager, Factory Manager, Director	9	Hand/power tools, auto parts, functional testing of board-level and finished products, non-standard automation equipment, high-speed rail brake systems, product testing instruments, management consulting, drill chucks, and power tool components.
16 ~20	General Manager, Director	4	Medical Equipment, Product Testing Instruments, Lean Consulting, Mechanical Equipment
11~15	Deputy General Manager, Factory Manager, Manager, Engineer	8	Auto parts, product testing instruments, office software

The DEMATEL Method: The Science and Human Affairs Program originally developed the Decision-making trial and evaluation laboratory (DEMATEL) method at the Bataille Memorial Institute in Geneva between 1972 and 1976 for the study and resolution of complex and intertwined problem clusters (Gabus & Fontela, 1972). The DEMATEL method improves the understanding of problem-specific, intertwined problem clusters and helps identify feasible solutions through hierarchical structures. Since the capabilities of DEMATEL complement AHP, their combination is quickly being used to solve practical management problems (Du & Li, 2021). Unlike traditional techniques such as AHP, which assume independent elements, this approach is one of the structural modeling techniques that can identify the interdependencies between system elements through causal graphs (Chiu, Hu, Lo & Chang, 2020). Causal graphs use numerical directional graphs rather than undirected graphs to describe the underlying concepts of contextual relationships and the strength of influence between elements (Dwijendra, Akhmadeev, Tumanov, Kosov, Shoar & Banaitis, 2021).

4. Results and Discussions

AHP Results: As can be seen from Table 3, the weights of the five-factor dimensions for growing free cash flow are, in order, "C_1- Operation Management (0.3221)", "C_3- Lean Talents (0.2053) ", "C_5- Financial Management (0.1817)", "C_2- Marketing Management (0.1527)", and "C_4- Lean Kaizen R&D (0.1382)".

"Operation Management (C_1)" is the most important among them. Table 2 also shows the importance of the evaluation criteria under the five-factor dimensions is ranked as follows.
(1) In dimension "C_1", "Strategic Planning (C_{11})" is the most important evaluation criterion.
(2) In dimension "C_2", "Quality first (C_{21})" is the most important evaluation criterion.
(3) In dimension "C_3", "PD matrix management (C_{33})" is the most important evaluation criterion.
(4) In dimension "C_4", "Leaders take the lead (C_{42})" is the most important evaluation criterion.
(5) In dimension "C_5", "Strategic deployment (C_{51})" is the most important evaluation criterion.

Daniel (1961) argues that most companies have two to six factors that determine their success (Tuan, 2021), and if a company wants to be successful, it must strive for excellence in these factors. We assume that the weight of the key assessment criteria must be greater than the average weight of all assessment criteria (1/15 or 0.0667) to be selected as a meaningful key indicator. Accordingly, since the weight of the first eight criteria is greater than 0.0667 and the sum of these eight key criteria is 0.7038 (more than 70%), these eight criteria are selected as key growth FCF indicators for this study. The results of this study indicate that the eight most important key growth FCF indicators are "C_{11}", "C_{51}" with a subscript, "C_{13} ", "C_{12}", "C_{42}", "C_{33}", "C_{32} ", "C_{21}". These findings also indicate that the eight most important evaluation criteria are mainly under the "C_1" dimension and include "Strategic Planning (C_{11})", "Quality is built in the process (C_{13})," and "New product planning (C_{12})". In contrast, the "C_2" dimension only has a single key evaluation criterion, "Quality first (C_{21})", and the "C_3" dimension has "PD matrix management (C_{33})" and "Goal-oriented (C_{32})" are the two key evaluation criteria. The "C_4" dimension only has the key evaluation criterion "Leaders take the lead (C_{42})". For the "C_5" dimension, only "Strategic deployment (C_{51})" is this key evaluation criterion. In addition, among the eight key criteria, the first two indicators weigh nearly 0.1 and above, indicating that the first two key criteria are particularly important in the decision to grow free cash flow.

Table 3: AHP Weights of Factors

Factors	Weights (A)	Assessment Criteria	Weights (B)	Aggregate Weights (C) = (A) * (B)
Operation Management	0.3221 (1)	Strategic Planning	0.5171 (1)	0.1666 (1)
		New product planning	0.2377 (3)	0.0765 (4)
		Quality is built into the process	0.2452 (2)	0.0790 (3)
Marketing Management	0.1527 (4)	Quality first	0.4407 (1)	0.0673 (8)
		Fulfill promise	0.2514 (3)	0.0384 (13)
		Just-in-time (JIT)	0.3079 (2)	0.0470 (11)
Lean Talents	0.2053 (2)	Executive ability	0.3128 (3)	0.0642 (9)
		Goal-oriented	0.3432 (2)	0.0705 (7)
		PD matrix management	0.3440 (1)	0.0706 (6)
Lean Kaizen R&D	0.1382 (5)	Lean Organization	0.3210 (2)	0.0444 (12)
		Leaders take the lead	0.5469 (1)	0.0756 (5)
		Full participation	0.1321 (3)	0.0183 (15)
Financial Management	0.1817 (3)	Strategic deployment	0.5380 (1)	0.0978 (2)
		People are the most important resource	0.2988 (2)	0.0543 (10)
		Performance management	0.1631 (3)	0.0296 (14)

DEMATEL Results: The AHP results of this study show that the importance ranking is known, but their causal relationship with each other is unknown. The eight most important key growth FCF indicators were coded as "C_{11}=A", "C_{51}=B", "C_{13}=C", "C_{12}=D", "C_{42}=E", "C_{33}=F", and "C_{32}=F". "C_{12}=D", "C_{42}=E", "C_{33}=F", "C_{32}=G", "C_{21}=H". We used the above eight important indicators as the DEMATEL questionnaire and asked 21 experts

with valid AHP questionnaires to answer the DEMATEL questionnaire again. Table 4 shows the total influence relationship matrix. The causal relationship diagram of the eight evaluation dimensions is shown in Figure 2.

Table 4-5: The Total Influence Relationship Matrix

	D	R	D+R	D-R
A	7.4680	7.7873	15.2553	-0.3193
B	8.1361	8.0821	16.2182	0.0539
C	6.4633	6.9551	13.4185	-0.4918
D	6.5003	7.0200	13.5203	-0.5197
E	8.2260	7.2210	15.4471	1.0050
F	6.8481	6.7686	13.6168	0.0795
G	7.8320	7.6735	15.5056	0.1585
H	6.9829	6.9490	13.9319	0.0339

Figure 2: The Causal Relationship Diagram of the Eight Factor Dimensions

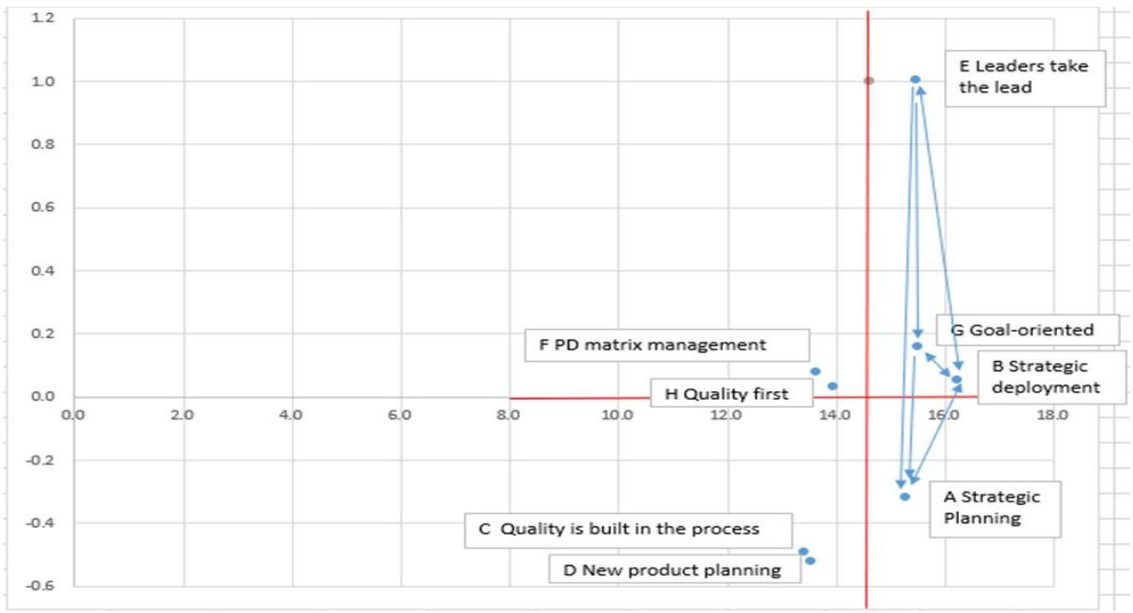

From the DEMATEL matrix of interactions (Figure 2), four of the eight KPIs were found to be relatively independent of each other, namely "C=C_{13}=Quality is built in the process", " D=C_{12}=New product planning", "F=C_{33}=PD matrix management", and "H=C_{21}=Quality first ", while the remaining four have influence relationships. Three of them have mutual influence relationship, they are "B=C_{51}= Strategic deployment versus A=C_{11}= Strategic Planning", "B=C_{51}= Strategic deployment B=C_{51}= Strategic deployment versus E=C_{42}= Leaders take the lead" and "B=C_{51}= Strategic deployment versus G=C_{32}= Goal-oriented". Three other indicators influence other indicators are "E=C_{42}= Leaders take the lead has to influence on A=C_{11} Strategic Planning", "E=C_{42}= Leaders take the Leaders take the lead has an impact on G=C_{32}=Goal-oriented", "G=C_{32}=Goal-oriented has an impact on A=C_{11}= Strategic Planning".

Discussions: Daniel (1961) argued that most industries have two to six critical factors determining success. If a company is to be successful, it must do a particularly good job with these factors (Tuan, 2021). In the AHP study, among the eight key criteria, the first two indicators, Strategic Planning and Strategic Deployment have a weighting of nearly 0.1 and above, indicating that the first two are particularly important in the decision to grow free cash flow. In the DEMATEL study, the first two key indicators of AHP were also included in the four

cause-effect relationships: 1. strategic deployment, 2. strategic planning, 3. leaders taking the lead, and 4. goal-oriented. The above findings show that the four key growth "free cash flow" metrics with causal influence and leadership include "Strategic deployment," "Strategic Planning," "Leaders take the lead," and "Goal-oriented." The following section discusses the four key metrics identified in this study, explains their practical implications, and provides recommendations for implementation.

(A) Strategic Deployment: From the DEMATEL cause-effect diagram, we understand that strategic deployment impacts the other three (KPI, leader, and goal). The deployment consists of strategic thinking, strategic planning, and strategic Innovation and uses limited human resources to implement long-term plans (Al-Qershi, 2021). We use breakthrough thinking to set three-year goals, break them down into yearly improvement plans, and execute them; we use strategic innovation to accelerate the development of new products and achieve the highest economic efficiency.

(B) Strategic Planning: KPI performance is influenced by leader and goal setting. Using the concept of the Balanced Scorecard (BSC) to transform business strategy into Key Performance Indicators (KPIs) by limiting the performance measurement tools of key objectives to ensure a balance between short-term performance measured by financial indicators and non-financial factors will lead the organization to achieve better competitiveness and long-term sustainability (Benková, Gallo, Balogová & Nemec, 2020). Performance index (KPI) is daily performance management that accumulates its short-term benefits into long-term results that affect Strategic deployment.

(C) Leaders Take the Lead: Leadership competency is positively correlated with key operational performance indicators, organizational lean maturity levels, and leaders' experience with lean systems (Seidel, Saurin, Marodin & Ribeiro, 2017). There is a positive relationship between leadership competency development and operational performance, with leaders influencing goal orientation and KPI results. This is complementary to Strategic deployment.

(D) Goal-Oriented: Goal orientation and strategic deployment influence each other, from strategic deployment to set goals. Challenging goal setting must be led by a good leader, both of which drive the efficiency of KPIs. Good goal setting has a mediating effect and helps the leader to accomplish the KPI, the baseline for measuring and improving the company's overall performance. Team cohesion towards the same goal, any team needs to be well connected with other teams, and knowledge needs to be exchanged between teams; therefore, a collective organizational vision is formed so that everyone works towards a common organizational goal and becomes a goal-oriented organization with team bridging (Vivas-López, 2014).

5. Conclusion and Recommendations

This paper examines the important research issue of how manufacturers should collect a set of suitable assessment criteria for evaluating growth FCF proposals and identifying key growth FCF indicators. We use AHP and DEMATEL methods to investigate key growth FCF indicators for manufacturers. The initial set of significant influences, derived from a survey of case companies and expert interviews, consisted of five key assessment dimensions and 15 assessment criteria. Then, we conducted an empirical survey using AHP and DEMATEL expert questionnaires. Research findings reveal that "Financial Management" is a key evaluation dimension for assessing the growth of FCF programs. The four most important KPIs for Financial Management are "Strategic deployment (PD)," "Strategic Planning (KPI)," "Leaders take the lead," and "Goal-oriented." Based on the findings of these four key indicators, some practical recommendations are suggested. Firstly, strategic deployment (PD) is one of the two mega indicators of growth FCF and has the greatest impact. Therefore, we recommend that the company's senior management stay in close contact with the market to maintain proper target setting over the long term, grasp market changes, set a 3~5 year target, think out-of-the-box, and use it as a long-term strategic deployment, then break down this target into annual sub-targets, and from the sub-targets, prioritize the important assessment sequence and set an action plan to accomplish the goal year by year.

For example, Tesla's electric car is a typical strategic deployment that subverts the concept of out-of-the-box thinking in the automotive industry by defining electric cars as a combination of Artificial Intelligence (AI)

and machinery. Because of this breakthrough strategy, the final result is 1. A high-end AI threshold to enter the market; 2. A high-performance supercharged charging network and high-capacity batteries to reduce mileage concerns; 3. Advanced in-vehicle information services; and 4. vertical integration of charging networks, as strategic deployment has led to today's Tesla success story (Chen & Perez, 2018) Secondly, strategic planning (KPI) is another mega indicator in the growth of free cash flow; KPI short-term goals rely on daily management to achieve the indicator steadily. When the target is not achieved, root cause countermeasures (RCCM) must be activated to find the root cause using 5 WHY 1 HOW (5W1H) to return to the expected target quickly. Execute daily visual management Kanban, including S-Safety, Q-Quality, D-Delivery, I-Inventory, and P-Efficiency. For example, Toyota's TPM for equipment maintenance on its production line uses four Key Performers index (KPI) indicators, including 1. Personnel, 2. Methods, 3. Machinery and 4. Materials as the measurement mechanism for equipment reliability KPI (Sakai & Li, 2021). Thirdly, leaders should take the lead to engage all employees and understand the importance of Lean Manufacturing (LM) through a talent training program.

Leaders take the lead developed to lead the team to participate in the on-site improvement and solve problems by fact-based means. Develop leaders who can lead in solving problems based on the "three realities" technique: on-site, physical, and realistic. Leaders take the lead in cultivating a religious belief in the Lean culture of the company, prove by the results that Lean Manufacturing (LM) becomes the soul of the leaders, and become a Lean Manufacturing (LM) practitioner. For example, 3M is a permanent leader in the innovation industry, and its strong leadership is the hallmark of 3M. Michael Roman, Chairman of the Board and CEO, proposed the goals of driving growth, including four aspects: 1. portfolio, 2. transformation, 3. innovation, and 4. people and culture, which has a significant relationship with the leadership of the leader (Peterson, 2021). Finally, set team goals higher than industry peers by 20 ~ 25%, setting high goals for the organization but not so high that the target is impossible to achieve. This is also a test of managers on their own must set high goals for themselves and, at the same time, highlights the company's growth to stand out from their peers. The target setting must not be changed midway; if KPI fails to meet the target, use root cause countermeasures (RCCM) to analyze the problem and find the root cause to solve it immediately. We do not have Gap, only go to get. For example, the Crisis Management Teams (CMT) of Covid-19 have clear Goal-oriented objectives and set their national objectives for each country. There are significant differences in the prevention and control of the outbreak.

The personal, economic, and public impact on individual countries varies depending on the country's goals (Thielsch, Röseler, Kirsch, Lamers & Hertel, 2021). With key free cash flow growth metrics in place, manufacturers will better understand the importance, urgency, and interplay of various courses of action to address problems at the most fundamental level of day-to-day management. By understanding the benefits of lean manufacturing in growing free cash flow and increasing market competitiveness, they will be more willing to participate in lean manufacturing training and no longer view such training as a waste of time. In addition, company personnel will realize that TPS/Lean Management System is a tool that must be studied and practiced to be used effectively. Another insight is that if all employees can participate in Lean Manufacturing, they can enjoy the benefits of working smart, not working hard, thus improving the whole company's productivity. In addition, the survey we did confirmed that companies that practice Lean Manufacturing have proven that they are indeed successful in growing their free cash flow. In addition, we have started to use AHP and DEMATEL to do factor analysis and impact correlation as a method of company decision-making. Finally, we have shown that using TPS/Lean management systems is necessary for modern business management. Our findings reaffirm the attractiveness of TPS/Lean Management and demonstrate the applicability of the Lean Manufacturing Model to large companies, small businesses, and all management situations involving production.

Most business people do not reap the full benefits of the Lean Manufacturing model because they have not completed the necessary training. The wrong tool without proper training is counterproductive, and the benefits are not realized. Therefore, TPS/Lean management includes many practical tools, and managers must be thoroughly familiar with TPS/Lean work methods and the synergies between these tools. It is important for managers to be thoroughly familiar with TPS/Lean working methods and the synergies between these tools and to practice how to increase free cash flow, reduce waste, and improve the company's overall efficiency. In practice, lean manufacturing increases free cash flow and active capital. Therefore,

properly enhancing this advantage can greatly improve a company's ability to expand its business and make acquisitions. This paper shows that implementing lean manufacturing has a complementary effect on strategic deployment (PD) and strategic planning (KPI) in terms of long-term and short-term indicators of free cash flow growth, enabling managers to have a good grasp of the company's operating conditions. With short and long-term goals to measure and leaders who understand the Lean Manufacturing model in depth to lead the team, company-wide efficiency is improved, resulting in growing free cash flow. Lean manufacturing has been proven to be a good system, but it cannot be automated and must be driven by good drivers and leaders. People are the key to success, and with full participation in Lean Manufacturing, growing free cash flow is a sure thing; it is a simple cause-and-effect relationship.

References

Al-Dhubaibi, A. (2021). Optimizing the value of activity-based costing system: The role of successful implementation. *Management Science Letters*, 11(1), 179-186.

Al-Khaled, A. A. S. & Fenn, C. J. (2020). The impact of strategic human resource management practices on organizational performance. *BERJAYA Journal of Services & Management*, 14, 53-60.

Al-Qershi, N. (2021). Strategic thinking, strategic planning, strategic innovation and the performance of SMEs: The mediating role of human capital, *Management Science Letters* 11, 1003–1012.

Abreu, A. & Calado, J. M. F. (2017). A fuzzy logic model to evaluate the lean level of an organization. *International Journal of Artificial Intelligence and Applications*, 8(5), 59-75.

Afiezan, A., Wijaya, G., Priscilia, P. & Claudia, C. (2020). The effect of free cash flow. Company size, profitability and liquidity on debt policy for manufacturing companies listed on IDX in 2016-2019 periods. *Budapest International Research and Critics Institute-Journal,* 3(4), 4005-4018.

Antony, J. & Gupta, S. (2019). Top ten reasons for process improvement project failures, *International Journal of Lean Six Sigma*, 10(1), 367–374.

Attaqwa, Y., Saputra, W. S. & Khamal, A. M. (2021). Kerem quality control using the quality control circle (QCC) method at PT. XYZ. *International Journal of Computer and Information System*, 02*(*03), 23-36.

Azanedo, L., Garcia-Garcia, G., Stone, J. & Rahimifard, S. (2020). An overview of current challenges in new food product development. *Sustainability,* 12(8), 3364.

Basset, M. A., Mohamed, M., Sangaiah, A. K. & Jain, V. (2018). An integrated neutrosophic AHP and SWOT method for strategic planning methodology selection. *Benchmarking: An International Journal,* 25(7), 2546–2564.

Becerra-Fernández, M., Herrera, M. M., Trejos, C. & Romero, O. R. (2021). Resources Allocation in Service Planning Using Discrete-Event Simulation. Ingenieriay Universidad, 25.

Benková, E., Gallo, P., Balogová, B. & Nemec, J. (2020). Factors affecting the use of balanced scorecard in measuring company performance. *Sustainability*, 12(3), 1178.

Budianto, B., Surachman, S., Hadiwidjojo, D. & Rofiaty, R. (2021). The effect of manufacturing agility competencies on lean manufacturing in increasing operational performance. *Uncertain Supply Chain Management*, 9(1), 195-204.

Çalık, A. (2021). A novel Pythagorean fuzzy AHP and fuzzy TOPSIS methodology for green supplier selection in the Industry 4.0 era, *Soft Computing*, 25, 2253–2265. https://doi.org/10.1007/s00500-020-05294-9

Castillo, C. (2022). The workers' perspective: emotional consequences during a lean manufacturing change based on VSM analysis. *Journal of Manufacturing Technology Management*, 33(9), 19–39.

Chen, Y. & Perez, Y. (2018). Business Model Design: Lessons Learned from Tesla Motors. In: da Costa, P., Attias, D. (Eds) Towards a Sustainable Economy. Sustainability and Innovation. Springer, Cham.

Chiarini, A. & Vagnoni, E. (2016). Strategic Planning for Lean Production, Comparing Hoshin Kanri with Balanced Scorecard. In: Chiarini, A., Found, P., Rich, N. (eds) Understanding the Lean Enterprise. Measuring Operations Performance. Springer, Cham, 221-236.

Chiarini, A. (2019). Choosing action plans for strategic manufacturing objectives using AHP: Analysis of the path and pitfalls encountered – an exploratory case study. *Journal of Manufacturing Technology Management,* 30(1), 180–194.

Chiu, C. J., Hu, J. C., Lo, Y. H. & Chang, E. Y. (2020). Health promotion and disease prevention interventions for the elderly: A scoping review from 2015–2019. *Int. J. Environ. Res. Public Health,* 17, 5335.

Choudhary, S., Nayak, R., Dora, M., Mishra, N. & Ghadge, A. (2019). An integrated lean and green approach for improving sustainability performance: a case study of a packaging manufacturing SME in the U.K. *Production Planning & Control,* 30(5-6), 353–368.

Chung, W., Talluri, S. & Kovács, G. (2018). Investigating the effects of lead-time uncertainties and safety stocks on logistical performance in a border-crossing JIT supply chain. *Comput. Ind. Eng,* 118, 440–450.

Cooper, D. J., Ezzamel, M. & Qu, S. Q. (2017). Popularizing a management accounting idea: The case of the balanced scorecard. *Contemporary Accounting Research,* 34(2), 991–1025.

Devine, F. (2016). When employees create their own high-performance culture: the rapid, mass engagement process. Lean Manage J, September.

Dieste, M., Panizzolo, R. & Garza-Reyes, J. A. (2021). A systematic literature review regarding the influence of lean manufacturing on firms' financial performance. *Journal of Manufacturing Technology Management*, 32(9), 101-121.

Ding, J. F. & Liang, G. S. (2004). Using fuzzy MCDM to select partners of strategic alliances for liner shipping. *Information Sciences*, 173(1-3), 197-225.

Domingues, I. & Machado, J. C. (2017). Lean Thinking in Non-profit Organizations. In: Machado, C., Davim, J. (eds) Green and Lean Management. Management and Industrial Engineering. Springer, Cham.

Dong, Z. C., Liu, Y. B., Wen, W. B., Ge, J. R. & Liang, J. (2019). Effect of Hatch Spacing on Melt Pool and As-built Quality During Selective Laser Melting of Stainless Steel: Modeling and Experimental Approaches. *Materials*, 12, 50.

Du, Y. W. & Li, X. X. (2021). Hierarchical DEMATEL method for complex systems. *Expert Systems with Applications,* 167, 113871.

Durão, L. F. C. S., Carvalho, M. M. & Takey, S. (2018). Internet of things process selection: AHP selection method. *The International Journal of Advanced Manufacturing Technology*, 99, 2623-2634.

Dwijendra, N. K. A., Akhmadeev, R., Tumanov, D., Kosov, M., Shoar, S. & Banaitis, A. (2021). Modeling Social Impacts of High-Rise Residential Buildings during the Post-Occupancy Phase Using DEMATEL Method: A Case Study. *Buildings* 11(11), 504.

Elkaseer, A., Mueller, T., Charles, A. & Scholz, S. (2018). Digital detection and correction of errors in as-built parts: A step towards automated quality control of additive manufacturing. World Congress on Micro and Nano Manufacturing.

Fang, S.J., Tsai, D.H., Tsai Z.H. (2019). *Strategic Management* 2e. 312, Canghai Book Information Co., Ltd., Taichung City, Taiwan.

Fiorentino, R. (2016). Operations strategy: a firm boundary-based perspective. *Business Process Management Journal,* 22(6), 1022–1043.

Gabus, A., Fontela, E. (1972). Perceptions of the world problematic: Communication procedure, communicating with those bearing collective responsibility. *Battelle Geneva Research Centre:* Geneva, Switzerland.

Gao, M. D., Wang, Q. Y., Wang, N., Ma, Z. L. & Li, L. (2022). Application of green design and manufacturing in mechanical engineering: Education, scientific research, and practice. *Sustainability* 14(1), 237.

Griffin, A. & Hauser, J. R. (1993). The voice of the customer. The Institute of Management Science/Operations Research of America.

Guo, D., Li, M., Zhong, R. & Huang, G.Q. (2021). Graduation Intelligent Manufacturing System (GiMS): An industry 4.0 paradigm for production and operations management. *Industrial Management & Data Systems*, 121(1), 86-98.

Hamadamin, Z. F. & Singh, U. S. (2019). Analyzing the main marketing strategies leading to customer satisfaction. *International Journal of Supply Chain Management,* 8(1), 23-38.

Hao, Z., Liu, C. & Goh, M. (2021). Determining the effects of lean production and servitization of manufacturing on sustainable performance, *Sustainable Production and Consumption*, 25, 374-389.

Harvey, C. E., Gapstur, S. M., Pottinger, C. A., Elena, J. W. & Helzlsouer, K. J. (2021). Applying the strategic planning process to a large research consortium: The example of the National Cancer Institute Cohort Consortium. *Cancer Epidemiol Biomarkers* Prev, 3, 1769–1774.

Heizer, J., Render, B. & Munson, C. (2016). Operations Management: Sustainability and Supply Chain Management (12th ed.), Pearson, New York, NY.

Henao, R., Sarache, W. & Gómez, I. (2019). Lean manufacturing and sustainable performance: Trends and future challenges. *Journal of Cleaner Production* 208, 99-116.

Hernandez-Matias, J. C., Ocampo, J. R., Hidalgo, A. & Vizan, A. (2020). Lean manufacturing and operational performance: Interrelationships between human-related lean practices. *Journal of Manufacturing Technology Management*, 31(2), 217–235.

Hubbard, R. G. (1998). Capital-market imperfections and investment. *Journal of Economic Literature 36,* 193225.

Ibrahim, I. R. A. (2021). Methods to improve lean production systems in line with industry 4.0 (Doctoral dissertation, Technische Hochschule Ingolstadt).

Jacobs, F. R., Chase, R. B. & Aquilano, N. J. (2004). Operations management for competitive advantage (10th ed.). Boston: McGraw Hill.

Jensen, M. C. (1986). Agency costs of free cash flow, corporate finance, and takeovers. *The American Economic Review*, 76(2), 323–329.

Jing, S., Tang, Y. & Yan, J. (2018). The application of fuzzy VIKOR for the design scheme selection in lean management. Mathematical Problems in Engineering, https://doi.org/10.1155/2018/9253643

Kablan, A. (2020). Dark Factories from an Industry 4.0 Perspective: Its Effects on Cost Accounting and Managerial Accounting. In: Hacioglu, U. (eds) Digital Business Strategies in Blockchain Ecosystems. Contributions to Management Science. Springer, Cham.

Kaplan, R. S. & Norton, D.P. (1996). The balanced scorecard. Boston: Harvard Business School Press.

Karekatti, C. (2021). Lean tools in apparel manufacturing, 11-lean human resources. Elsevier B.V., 331-353.

Kembauw, E., Munawar, A., Purwanto, M. R., Budiasih, Y. & Utami, Y. (2020). Strategies of financial management quality control in business. *Article Info,* 82, 16256-16266.

Kilic, H. S., Yurdaer, P. & Aglan, C. (2021). A leanness assessment methodology based on neutrosophic DEMATEL. *Journal of Manufacturing Systems,* 59, 320-344.

Kim, N., Montreuil, B. & Klibi, W. (2022). Inventory availability commitment under uncertainty in a dropshipping supply chain. *European Journal of Operational Research,* 302(3), 1155-1174.

Khalfallah, M. & Lakhal, L. (2020). The impact of lean manufacturing practices on operational and financial performance: the mediating role of agile manufacturing, *International Journal of Quality and Reliability Management*, 38(1), 147-168.

Kumar, S., Dhingra, A. & Singh, B. (2018). Lean-Kaizen implementation: A roadmap for identifying continuous improvement opportunities in Indian small and medium-sized enterprises. *Journal of Engineering, Design, and Technology*, 16(1), 143–160.

Lapsley, I. & Rekers, J. V. (2017). The relevance of strategic management accounting to popular culture: The world of West End Musicals. *Management Accounting Research,* 35, 47-55.

Liker, J. K. (2004). The Toyota way: 14 management principles from the world's greatest manufacturer. McGraw- Hill, New York, USA.

Linde, I. & Philippov, D. (2021). What do your customers think about it? To guess or to know? Access Journal: Access to Science, Business, *Innovation in Digital Economy*, 2(1), 17-27.

Liu, S., Yu, Q., Zhang, L., Xu, J. & Jin, Z. (2021). Does intellectual capital investment improve financial competitiveness and green innovation performance? Evidence from renewable energy companies in China. Mathematical Problems in Engineering.

Mashal, I., Alsaryrah, O., Chung, T. Y. & Yuan, F. C. (2019). A multi-criteria analysis for an internet of things application recommendation system, *Technology in Society*, 60, 101216.

Mas'udin, I. & Kamara, M. (2018). Impact of just-in-time, total quality management and supply chain management on organizational performance: a review perspective. *Journal Teknik Industry,* 19(1), 11–20.

Maware, C., Okwu, M. O. & Adetunji, O. (2021). A systematic literature review of lean manufacturing implementation in manufacturing-based sectors of developing and developed countries. International Journal of Lean Six Sigma. https://doi.org/10.1108/IJLSS-12-2020-0223

Mohanty, S. & Pradhan, B. B. (2020). Dynamic teamwork within a lean organization. *Palarch's Journal of Archaeology of Egypt/Egyptology*, 17(6) 113-122.

Mubarik, M. S., Kazmi, H. S. H. A. & Zaman, S. I. (2021). Application of gray DEMATEL-ANP in green-strategic sourcing. Technology in Society, 64, 101524.

Mulugeta, L. (2021). Productivity improvement through lean manufacturing tools in Ethiopian garment manufacturing company, *Materials Today: Proceedings,* 37(2), 1432–1436.

Nagy, L., Ruppert, T. & Abonyi, J. (2020). Analytic hierarchy process and multilayer network-based method for assembly line balancing. *Applied Sciences*, 10, 3932.

Nariswari, N. P. D., Bamford, D. & Dehe, B. (2019). Testing an AHP model for aircraft spare parts, *Production Planning & Control*, 30(4), 329-344.

Netland, T. H., Powell, D. J. & Hines, P. (2020). Demystifying lean leadership, *International Journal of Lean Six Sigma,* 11(3), 543–554.

Ohno, T. (1988). Toyota production system – Beyond large-scale production, 1st edition, Productivity Press, New York.

Oktariyani, O. & Hasanah, A. (2019). The effect of free cash flow, liquidity and foreign ownership on debt policy in companies listed on the Indonesia Stock Exchange. *Journal of Applied Managerial Accounting,* 3(1), 20-35.

Palange, A. & Dhatrak, P. (2021). Lean manufacturing a vital tool to enhance productivity in manufacturing. *Materials Today: Proceedings,* 46(1), 729-736.

Pandya, A., Ismoyowati, D. & Suharno, S. (2020). Developing coffee shop improvement strategy by considering voice of customer. *Agroindustrial Journal, 7*(2), 475-483.

Park, Y., Lee, S. W. & Lee, J. (2020). Comparison of fuzzy AHP and AHP in multicriteria inventory classification while planning green infrastructure for resilient stream ecosystems, *Sustainability*, 12, 9035.

Payne, A., Frow, P. & Eggert, A. (2017). The customer value proposition: evolution, development, and application in marketing. *Journal of the Academy of Market Science,* 45, 467–489.

Peterson, C. (2021). 3M Investment Report, Retrieved from https://ecommons.luc.edu/cgi/viewcontent.cgi?article=1499&context=ures

Ribalko, O. M., Varlamova, I. S. & Yevtushenko, R. M. (2021). Features of improvement of cost accounting. and product accounting calculation. *Bulletin of Zaporizhzhia National University. Economic sciences,* 1, 49.

Richardson, S. (2006). Over-investment of free cash flow. *Review of Accounting Study,* 11, 159–189.

Rouyendegh, B. D., Topuz, K., Dag, A. & Oztekin, A. (2019). An AHP-IFT integrated model for performance evaluation of e-commerce websites, Information Systems Frontiers, 21, 1345-1355.

Saaty, T. L. (1980). The Analytic Hierarchy Process. McGraw: New York.

Saaty, T. L. (1988). What is the analytic hierarchy process? In Mitra, G., Greenberg, H.J., Lootsma, F.A., Rijkaert, M. J. & Zimmermann, H. J. (eds) Mathematical Models for Decision Support. NATO ASI Series, 48. Springer, Berlin, Heidelberg.

Sachdev, A. & Agrawal, J. (2017). Application of policy deployment and daily management in service sector. *International Journal of Quality Innovation,* 3(8), 237-251.

Sakai, H. & Li, P. (2021). Original paper productivity improvement with equipment owner TPM management at Toyota Manufacturing USA: Highly reliable production system for expanding global production. *Sustainability in Environment,* 6(2), 78-91.

Saleh, M. (2020). Built-in software quality in Agile development. adapted from diva-portal.org.

Samuel, R., Rajesh, M., Rajanna, S. & Franklin, E. (2021). Implementation of lean manufacturing with the notion of quality improvement in electronics repair industry, *Materials Today: Proceedings,* 47(10), 2253-2257.

Seidel, A., Saurin, T. A., Marodin, G. A. & Ribeiro, J. L. D. (2017). Lean leadership competencies: a multi-method study. *Management Decision*, 55(10), 2163–2180.

Soboleva, Y. P., Matveev, V. V., Ilminskaya, S. A., Efimenko, I. S., Rezvyakova, I. V. & Mazur, L. V. (2018). Monitoring of business operations with cash flow analysis. *International Journal of Civil Engineering and Technology (IJCIET),* 9(11), 2034–2044.

Sugimori, Y., Kusunoki, K., Cho, F. & Uchikawa, S. (1977). Toyota production system and kanban system materialization of just-in-time and respect-for-human system. *International Journal of Production Research,* 15(6), 553-564.

Sun, R. & Li, T. (2020). Assessing factors for designing a successful B2C e-commerce website using fuzzy AHP and TOPSIS-Grey methodology, *Symmetry*, 12, 363.

Susilawati, A. (2021). Productivity enhancement: Lean manufacturing performance measurement based multiple indicators of decision-making. *Production Engineering Research Development,* 15, 343–359.

Świąder, K. & Marczewska, M. (2021). Trends of using sensory evaluation in new product development in the food industry in countries that belong to the EIT regional innovation scheme. *Foods,* 10, 446.

Thielsch, M. T., Röseler, S., Kirsch, J., Lamers, C. & Hertel, G. (2021). Managing pandemics—demands, resources, and effective behaviors within crisis management teams. *Applied Psychology*, 70(1), 150-187.

Thomas, R. K. (2021). Health services planning, Springer Science+Business Media, LLC, part of Springer Nature 215.

Touriki, F. E., Benkhati, I., Kamble, S. S. & Belhadi, A. (2021). An integrated smart, green, resilient, and lean manufacturing framework: A literature review and future research directions. *Journal of Cleaner Production*, 319, 128691.

Tseng, S. H., Wee, H. M., Reong, S. & Wu, C. I. (2019). Considering JIT in assigning tasks for return vehicles in the green supply chain. *Sustainability,* 11(22), 6464–6464.

Tseng, W. J., Ding, J. F. & Chen, Y. C. (2018). Evaluating key risk factors affecting cargo damages on export operations for container shipping carriers in Taiwan, *International Journal of Maritime Engineering*, 160(A4), 425-434.

Tuan, N. T. (2021). The other side of success factors — A systemic methodology for exploring critical success factors. *Systemic Practice and Action Research,* 35, 441–452.

Ulrich, K. T. & Eppinger, S. D. (2012). Product Design and Development. McGraw Hill Education, New York.

Vargas, L. G. (1990). Overview of the analytic hierarchy process and its applications, *European Journal of Operational Research*, 48(1), 2-8.

Vergara, I. G. P., Sánchez, J. A. A., Poveda-Bautista, R. & Diego-Mas, J. (2020). Improving distributed decision making in inventory management: A combined ABC-AHP approach supported by teamwork, Complexity, Article ID 6758108.

Vivas-López, S. (2014). Talent management and teamwork interaction: Evidence in large Spanish companies. *International Journal of Business*, 19(1), 30.

Vries, H. D. & Poll, H. M. V. D. (2018). Cellular and Organizational team formations for effective Lean transformations, Production *& Manufacturing Research,* 6(1), 284–307.

Wolniak, R. (2019). Operation manager and its role in the enterprise, *Production Engineering Archives,* 24, 1–4.

Wolniak, R., Skotnicka-Zasadzień, B. & Zasadzień, M. (2017). Application of the theory of constraints for continuous improvement of a production process - case study, 3rd International Conference on Social, Education, and Management Engineering (SEME), Shanghai, 169-173.

Womack, J. P. & Jones, D. T. (1996). Lean Thinking, Andrew Nurnberg Associates International Ltd, USA.

Yaghtin, S., Safarzadeh, H. & Zand, M. K. (2020). Planning a goal-oriented B2B content marketing strategy, *Marketing Intelligence & Planning,* 38(7), 1007-1020.

Yao, M. J. & Hsu, T. C. (2018). An efficient search algorithm for obtaining the optimal replenishment strategies in assembly-type just-in-time supply chain systems. *Journal of Industrial & Production Engineering*, 35(2), 118–128.

Zaika, V. V. & Vylegzhanina, E. V. (2017). Management of prime cost and efficiency of production / In the collection: Actual questions of modern financial science Materials of correspondence all-Russian. Scientific and Practical Conference. Kuban State University; Edited by A.V. Пенюгаловой, 113–116.

Zhang, C. & Chen, M. (2017). Prioritizing alternatives for sustainable end-of-life vehicle disassembly in China using AHP methodology. *Technology Analysis & Strategic Management*, 30(5), 556-568.