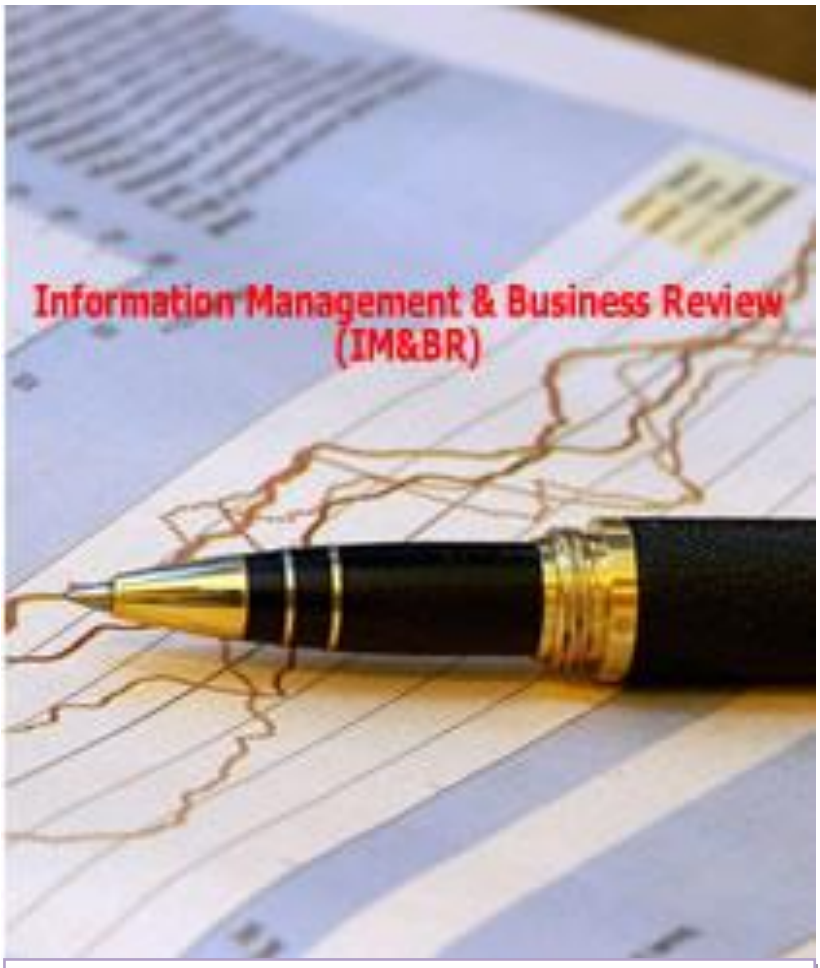

Vol. 9 No. 6 ISSN 2220-3796

Published by

International Foundation for Research and Development (IFRD)

Editorial

Information Management and Business Review (IMBR) provides a unique platform to scholars around the world to share their knowledge and publish research work in the fields of information management, business, management and related disciplines. The work submitted for publication consideration in IMBR should address empirical and theoretical developments in the subjects related to scope of the journal in particular and allied theories and practices in general. Scope of IMBR includes: subjects of finance, accounting, auditing, cost & management accounting, financial psychology, financial literacy, marketing, information management, human resource management, knowledge management, innovation, change management, enterprise management, e-commerce and information system. Author(s) should declare that work submitted to the journal is original, not under consideration for publication by another journal, and that all listed authors approve its submission to IMBR. It is IMBR policy to welcome submissions for consideration, which are original, and not under consideration for publication by another journal at the same time. Author (s) can submit: Research Paper, Conceptual Paper, Case Studies and Book Review. The current issue of IMBR comprises of papers of scholars from Pakistan, Saudi Arabia and Indonesia. Job resourcefulness, customer orientation & employees outcomes, factors affecting consumer's willingness to buy counterfeit products, casual relationship of job design & employee's behavior, impact of social support on psychological distress, and information technology systems in public & private sector are some of the major practices and concepts examined in these studies. Journal received research submission related to all aspects of major themes and tracks. All the submitted papers were first assessed by the editorial team for relevance and originality of the work and blindly peer reviewed by the external reviewers depending on the subject matter of the paper. After the rigorous peer-review process, the submitted papers were selected based on originality, significance, and clarity of the purpose. Current issue will therefore be a unique offer, where scholars will be able to appreciate the latest results in their field of expertise, and to acquire additional knowledge in other relevant fields.

Prof. Dileep Kumar, M., Ph. D.
Editor In Chief

Editorial Board

Editor In Chief

Dileep Kumar, M., Ph. D., University Institute for International and European Studies (Malaysia Center) University Gorgasali, Georgia

Members

Ari Warokka, Ph. D., University Utara Malaysia, Malaysia
Susantha Herath, Ph. D, St. Cloud State University, USA
Dong Hwa Kim, Ph. D., Hanbat National University, Daejeon, Republic of Korea
Eric Bentzen, Copenhagen Business School, Denmark
Ijaz Ur Rehman PhD, Al Falah University, Dubai, United Arab Emirates
Gurmeet Singh Bhabra, Ph. D, University of Otago, New Zealand
KOH Noi Keng PhD, National Institute of Education, Nanyang Technological University, Singapore
Nazli Akman, Ph. D., Bilkent University, Turkey
Hoonandara R Goonatilake, Ph D, Texas A&M University, USA
Ketna Mehta, Ph. D, Welingkar Education, India
Khorshed Chowdhury, Ph. D, University of Wollongong, Australia
Elena Garcia Ruiz, Ph. D, Universidad de Cantabria, Spain
Samsudin Wahab, Ph. D., MARA University of Technology, Malaysia
Ayhan Kapusuzoglu, Ph. D, Yildirim Beyazit University, Turkey
Johan de Jager, Ph. D., Tshwane University of Technology, South Africa
Lew Tek Yew, Ph. D, Curtin University Sarawak, Malaysia
Rishidaw Balkaran, Ph. D., Durban University of Technology, South Africa
Rohitha Goonatilake, Ph. D, Texas A&M Int. University, USA
Hai-Chin YU, Ph. D, Chung Yuan University,Chungli, Taiwan
Boubker Sbihi PhD, I-shcool ESI, Rabat, Morocco
Chandana Prasad Withana, Ph. D., Charles Sturt University, Sydney, Australia

Table of Contents

Description	Pages
Title	1
Editorial	2
Editorial Board	3
Table of Contents	4
Papers	5
Job Resourcefulness, Customer Orientation and Employees Outcomes: A Study of Hotel Employees in Pakistan Afsheen Fatima, Sarah Salah Uddin, Saba Mehmood, Ashfeen Bibi	6
A Study of Factors Affecting Consumer's Willingness to buy Counterfeit Products Khalid Jamil, Muhammad Asghar Ali, Naeem Akram	18
A Study of Casual Relationship of Job Design and Employee's Behavior Saqib Muneer, Khalid Jamil, Muhammad Idrees	26
The Impact of Social Support on Psychological Distress among Khawajasira Community: The Mediated Effect of Self-Efficacy Hafiz Muhammad Ahmad Abbas, Virdah Iram Gull, Khalid Ghaffar	36
Differences in Information Technology Systems in Public and Private Sector Marwah Yusuf, Paulus Tangke, Grace T. Pontoh	41

PAPERS

Information Management and Business Review (IMBR)
Vol. 9, No. 6, December 2017 (ISSN 2220-3796)

Job Resourcefulness, Customer Orientation and Employees Outcomes: A Study of Hotel Employees in Pakistan

Afsheen Fatima[1*], Sarah Salah Uddin[2], Saba Mehmood[3], Ashfeen Bibi[4]
[1]SZABIST Islamabad, Pakistan & University Institute of Management Sciences, Pakistan
[2]Virtual University of Pakistan
[3]Punjab Group of Colleges and UCP Gujar Khan Campus, Pakistan
[4]IGNITE (National ICT R&D Fund), Pakistan
afsheen.uaar@gmail.com*, sarahsdin@gmail.com, sabxskages27@gmail.com, ashfeen.munir@gmail.com

Abstract: Increased competition and a rapidly changing environment present a huge challenge to organizations in implementing effective human capital and development strategies to boost their efficiency and overall performance. An organization's human resource is definitively its most significant asset. The provisions of important job resources help workforce perform their job in an efficient way. These resources are very important for employee satisfaction and performance of the organization. This study was carried out to examine the impact of job resourcefulness (JR) on two employee outcomes i.e., job engagement and career satisfaction directly as well as indirectly through customer orientation. A convenient sample of 257 employees was taken from hospitality industry within twin cities of Pakistan (Rawalpindi and Islamabad). Questionnaires were used to collect data using a five point Likert type scale. Job resourcefulness was operationalized using four items from Harris et al. (2006) whereas customer orientation was measured using four items from Licata et al. (2003). Five items were selected from career satisfaction scale developed by Greenhaus et al. (1990). Finally, nine items scale of job engagement developed by (Schaufeli, Bakker et al. 2006) was also used. The results exhibit that all the variables are positively and significantly related. Moreover, the findings are indicative of customer orientation's role as a mediator between job resourcefulness and employee outcomes. Recommendations for future research and research implications are also discussed at the end of the paper.

Keywords: *Job resourcefulness, Customer orientation, Employee outcomes, Job engagement, Career satisfaction, Hospitality industry, Pakistan*

1. Introduction

It is generally acknowledged that customer orientation (CO) is an essential tool to ensure the existence and development of organizations(Hurley and Hult 1998).Customer oriented employees direct their endeavors to better serve their customers (Brown, Mowen et al. 2002)for instance, attentively recognizing customer needs, creating the impetus on management to effectively meet those needs and then adapting and adjusting communication to match all customers' requirements. Research shows that worker CO contributes towards enhancing consumer loyalty(Huang and Chang 2008); customer trust and responsibility (Huang and Chang 2008),and employee performance(Babakus, Yavas et al. 2009);(Boles, Babin et al. 2001).(Saxe and Weitz 1982)characterized CO at the individual level as the extent to which customer support officer/employee engage and interact with customers to satisfy customer's requirements and contribute to their fulfillment. This concept was formally introduced in the early 1990s and led to the development of the branch of marketing called "relationship marketing". The basic premise of this concept lies on building a long term relationship with the client that is beneficial for both of them i.e., customer as well as organization.

Job resourcefulness is essential to develop and utilize the concepts of relationship marketing, more specifically customer orientation. Job resourcefulness can be developed through the realization of a few basic elements with respect to relationship marketing. Firstly, organizations through their systems and managers give employees the opportunity to develop the capacity to fulfill customer needs. Secondly, organizations must realize that in the absence of empowerment employees will feel restricted and cannot creatively fulfill requirements. Thirdly, customers should be integrated into the planning process. Customer input is significant; the customer is the entity who will be utilizing the product. In the event, that the client is not satisfied right from the start, the company may lose him which effectively means a loss in revenue. This entire system of thought needs to be built into the organizational system. The word system leads us to conclude that effective relationship marketing should emphasize teamwork. Two important outcomes of job

resourcefulness and customer orientation are included in this study i.e., job engagement and career satisfaction. Job engagement is defined as a combination of vigor, absorption and dedication (Schaufeli, Salanova et al. 2002). Career satisfaction is the extent to which employment needs are satisfied(Porter 1963). In this manner, the worker's level of customer orientation is viewed as essential for the company's financial achievement(Hennig-Thurau, Gwinner et al. 2004);(Sergeant and Frenkel 2000).

The gaps of this study are identified from the extant literature. The study conducted by Karatepe and Douri (2012)in Iran included three outcomes of jobs that include job satisfaction, role-prescribed customer service and turnover intentions. They suggest that other outcomes of jobs may also be included in further research including enhanced performance variables such as creativity and those related to the performance of additional roles and responsibilities and career satisfaction. Moreover, they suggest that customer orientation's significance is quite high when considering personality traits especially in service oriented jobs where the employee is the first line of contact with the customer. Implications for future research include discussion of resources for job performance, job engagement on the basis of additional motivational models. The primary purpose of this study is to measure the mediation of CO between job resourcefulness and employee outcomes including job engagement and career satisfaction in hospitality sector of Pakistan. This sector is an important part of Pakistani service industry. The context of our study is service sector. The service sector accounts for 30 % of global employment. The service sector has provided steady growth to Pakistan's economic growth and services sector share in Gross Domestic Product is over 50% (Economic survey of Pakistan). The findings of this research may add to the existing literature on customer orientation by addressing how positive employee outcomes are impacted by job resourcefulness.

Bagozzi presented his theory on the reformulation of attitudes in 1992. This theory is the primary basis for hypotheses development and the proposed relationships between the variables. Previous literature and other studies support that this conceptualization is valid in light of empirical proof (Karatepe 2012).Bagozzi (1992)conceptualization is represented in terms of a good appraisal giving arise to an emotional response that determines the behavior of the employee and this is a sequential process. An employee appraises various outcomes that produce specific emotions which in turn, lead to coping responses or behaviors. Following figure presents the schematic of the model under study in this research based on the theory of reformulation of attitude (Bagozzi 1992). Frontline employees in hospitality industry were selected as they are the primary participants in practicing and implementing customer orientation. Interest in customer orientation in the services sector emerged, principally in the 1990s. Interestingly, countless articles provide evidence that being market oriented enhances the quality and financial aspects as well as other benefits of businesses engaged in service ventures. Because of the extraordinary attributes of services, the fulfillment of customer needs is more elemental and crucial for service organizations than other sectors.

2. Literature Review

Job Resourcefulness (JR): Job resourcefulness refers to physical, social, or decision-making elements of work which are functional in accomplishing organizational objectives, minimize complaints and the related expenses, and fortify self-improvement and development(Bakker and Demerouti 2007). A workforce that has job resourcefulness has the general capacity to work applying their energies into discovering better approaches for serving clients and meeting their desires. Job resourceful workers are required to overcome issues in the working environment by collecting and utilizing the resources. Research presents evidence that job resourcefulness has positive effect on CO (Licata, Mowen et al. 2003). Earlier studies show that availability of job resources, e.g., rewards, training and development opportunities, management and supervisory support and empowerment lead to increase in the job satisfaction of employees and OC, and decrease the intentions of the employees to consider employment elsewhere. Supervisory support increases the job satisfaction of employees engaged in service oriented jobs especially when they are the first point of contact (Hee Yoon, Hyun Seo et al. 2004); and loyalty (Salanova, Agut et al. 2005). Empowerment relates positively to job satisfaction and affective organizational commitment (Liden, Wayne et al. 2000); (Fulford and Enz 1995). Additionally, where suitable rewards are available the employees' job satisfaction increases as does the affective element of OC (Farrell and Rusbult 1981); (Lewig and Dollard 2003).

Employee Outcomes-Job Engagement (JE): Job engagement is characterized by vigor, dedication and absorption(González-Romá, Schaufeli et al. 2006). Vigor in working is identifiable by energy and mental dexterity exhibited during work performance. Dedication refers to being highly involved and committed to work while displaying a strong and inherent commitment and affiliation. Employees who exhibit a high level of absorption tend to be completely focused in their work to the extent that they are unaware of any time passing by and generally have issues in disengaging themselves from work (Schaufeli and Bakker 2004). Engaged employees have large amounts of energy and are energetic and display enthusiasm about their work. Employees who display high levels of job engagement perform at higher levels than their peers (Demerouti and Cropanzano 2010), and experience more positive feelings at the workplace such as passion and zeal for work, personal and job satisfaction and tend to appear more content and happy. Positive feelings allow individuals to be more creative and provide the impetus needed for creativity and out of the box thinking to utilize personal resources towards fulfilling work tasks (Carpenter and Fredrickson 2001). Moreover, previous research has demonstrated that engaged workers frequently encounter positive emotions (Schaufeli, Taris et al. 2008), and this is the inspiration behind their productivity.

Career satisfaction (CS): Career satisfaction is satisfaction with one's career all in all. Research on career satisfaction proposes that it is affected by different variables. Career satisfaction is the extent to which employment needs are satisfied and the perception of this need fulfillment by the employee (Porter 1963).It is a "positive (or negative) evaluative judgment one makes about one's profession or vocation circumstance" (Weiss 2002).Career satisfaction is not about a burst of passion or a one-time display of intense emotion. Rather it refers to a consistent feeling of well-being. Career satisfaction of employees grows through psychological and affective commitment to their employments(Locke 1969),(Organ and Near 1985), (Judge and Ilies 2004), (Rich, Lepine et al. 2010).Career satisfaction is a mix of both what a worker feels (influence) about his/her occupation and what he/she considers (discernment) about different parts of his/her profession.

Customer orientation (CO): Customer orientation at the organizational level is important as it adds to the organization's long-term profitability(Macintosh 2007). On the individual level, according to Homburg, Müller et al. (2011) CO is the extent to which service providers connect with customers to satisfy their requirements and build their satisfaction. CO is defined as "inclination to meet customer needs in an on-the-job context" (Brown, Mowen et al. 2002).The concept of customer oriented behavior (COB) refers to practices followed by service providers that lead to fulfilled customers (Frazer Winsted 2000).Past researchers (e.g.(Hennig-Thurau, Gwinner et al. 2004);(Hennig-Thurau and Walsh 2003)) define CO as meeting the requirements of both present and future clients and distinguished different measurements of the CO: technical and social skills, motivation, and the self-perceived power of decision making of the employee. Research has shown that good job outcomes are a result of customer orientation. For example, Donavan, Brown et al. (2004). determined that job satisfaction, organizational citizenship behavior and affective organizational commitment are outcomes of positive customer orientation (Donavan, Brown et al. 2004).Yavas, Karatepe et al. (2011) showed that CO has a negative impact on turnover intentions of workers and leads to job satisfaction and affective organizational commitment.

Hypotheses Building

Job Resourcefulness and Job Engagement: As already discussed, job resourcefulness refers to physical, social, or authoritative and business segments of work, which are very important in meeting organizational objectives (Bakker and Demerouti 2007).Being inherent motivators, job resources satisfy fundamental individual's needs while fostering their personal growth (Deci and Ryan 1985). These motivators are primarily extrinsic and generally encourage employees to work towards an assignment(Gagné and Deci 2005). In both cases, workers may turn out to be more involved with their specific jobs, as they get satisfaction from it (Schaufeli and Bakker 2004), and ultimately, they perform better(Bakker 2009).Job resources constitute a general class of employment attributes. Interestingly, these attributes are an inherent part of all human capital development processes irrespective of job type or category (Bakker and Demerouti 2007). Past studies have reliably demonstrated that job resources are related positively with job engagement (Halbesleben 2010). Job resources satisfy essential human needs at the workplace, for example, the requirements for self-sufficiency, relatedness and skills(Van den Broeck, Vansteenkiste et al. 2008).Similarly,

research has demonstrated that job resources especially have an effect on engagement when they have to meet great job demands(Hakanen, Bakker et al. 2005). At the point when workers face big challenges at workplace and have adequate job resources, they can prosper in their job and exceed expectations of their organizations. On the basis of this discussion, this study proposes when employees perceive job resourcefulness they are highly engaged in their job.
H1: JR has a positive relationship with job engagement

Job Resourcefulness and Career Satisfaction: A healthy relationship between the organization and its employees engaged directly in customer interaction is important for employee satisfaction (Hee Yoon, Beatty et al. 2001). Where the personal characteristics of employees' match with demands of work, Edwards, Caplan et al. (1998) suggests, work satisfaction will be higher. The point of view leads to the assumption that where resources are relatively few and employees are highly resourceful, employees are more satisfied with their career and less inclined to leave. Armstrong-Stassen and Ursel (2009)found that organizational resources lead to career satisfaction and retention of older workers. Employees who are highly resourceful can perform work related tasks with a high level of effectiveness even when they have less than sufficient resources to complete them as they are satisfied with their career, thus we hypothesize that.
H2: JR is positively related to career satisfaction.

Job Resourcefulness and Customer Orientation: Employees who display job-resourceful behavior can achieve job related objectives, regardless of the possibility that they are confronted with scarce resources in the working environment. Job resourcefulness is a discriminating personality trait in frontline service jobs, on the grounds that lack of training, insufficient social support, and insufficient empowerment and rewards are common in the service industries. The present study maintains customer orientation is increased due to job resourcefulness. Since employees who are increasingly resourceful employees can perform well under stress and even when they lack resources, hence they ought to be creative in fulfilling customer requirements (Licata, Chakraborty et al. 2008). Research has shown, that job resourcefulness predicts customer orientation (Licata, Chakraborty et al. 2008). Thus, it is hypothesized that
H3: JR is positively related to with CO.

Customer Orientation and Job Engagement: Researchers have suggested that customer orientation impacts the outcomes of various business activities and decision-making because of employees' satisfaction and engagement in work (Zhu, Nakata et al. 2007);(Donavan, Brown et al. 2004);(Anaza and Rutherford 2012);(Zablah, Franke et al. 2012).Babakus and Yavas (2012) concluded that high level customer oriented employees would be aware about future job conditions thereby make themselves more involved and emotionally engaged in the work. AdditionallyDonavan, Brown et al. (2004)reported that employees with strong customer orientation are for the most part likely to be more committed and satisfied such that they do not consider leaving their job. Their performance in handling customers' issues is superior as compare to anything those with low customer orientation. Anaza and Rutherford (2012)and Zablah, Franke et al. (2012)found customer orientation as an antecedent of engagement. On the basis of this discussion, it is hypothesized that
H4: CO has a positive relationship with job engagement.

Customer Orientation and Career Satisfaction: Research proposes that an elevated degree of customer orientation is associated to positive employee outcomes(Judge, Thoresen et al. 2001);(Bettencourt, Gwinner et al. 2001);(Brown and Peterson 1993).Customer orientation is normally characterized as a somewhat stable identity quality or "inclination to address customer issues in work connection" (Brown, Mowen et al. 2002) The outcome of the contact between the workers and the customers amid the administration experiences permits the worker to suspect the client's necessities (Schneider and Bowen 1993).Satisfied workers are more focused and more productive in terms of work output (Heskett, Sasser et al. 1997). Workers tend to be smart in addition to putting in extra effort and these results in higher efficiency (Reichheld, Teal et al. 1996). As indicated by Reichheld, Teal et al. (1996)three criteria drive how hard workers work. They work the hardest when: (1) they have occupation pride, (2) when they discover their occupations interesting and important, and (3) when they perceive advantage from the work they have finished. They express that employees work with confidence when they are sufficiently prepared and have been at work sufficiently long to obtain the advantages from their preparation. In organizations where employees are disconnected from

their work, there is high level of stress, emotional and professional strain, burnout and a lack of trust on self, teams and the organizations (Caponetti 2012). In the services sector especially, the general understanding is that the environment and climate of an organization trains workers to give superb customer services (Ford, Heaton et al. 2001). There are only a few studies that have linked customer orientation with career satisfaction. For instance, previous research has found correlation between customer orientation and career satisfaction (Hartline and Ferrell 1996);(Pettijohn, Pettijohn et al. 2002);(Stock and Hoyer 2002).Lounsbury, Loveland et al. (2003)examined different personality traits that correlated with career satisfaction in different occupational groups, including some Big Five traits—conscientiousness, extroversion, and openness—and other, narrower traits, such as assertiveness, customer service orientation, and human managerial relations orientation (Lounsbury, Loveland et al. 2003). On the basis of literature, this study suggests that customer orientation leads to career satisfaction.
H5: CO is related positively to career satisfaction

CO as Mediator between JR and Employee Outcomes: Review of existing literature discusses the technicalities of mediation between JR and employee outcomes. Bagozzi's sequential conceptualization of attitude formulation is the basis for the current research. The hypothesized model focuses on CO as it mediates the impact of JR on the employee's engagement with the job and career satisfaction. That is, employees' affective response (customer orientation) that is an outcome of their assessment and understanding of the resources available to them for job performance will improve their resilience in coping with job conditions i.e., engagement and career satisfaction. This leads to the development of the following hypotheses:
H6: The relationship between job resourcefulness and job engagement is partially mediated by CO.
H7: The relationship between job resourcefulness and career satisfaction is partially mediated by customer orientation.

Figure 1: Theoretical Framework

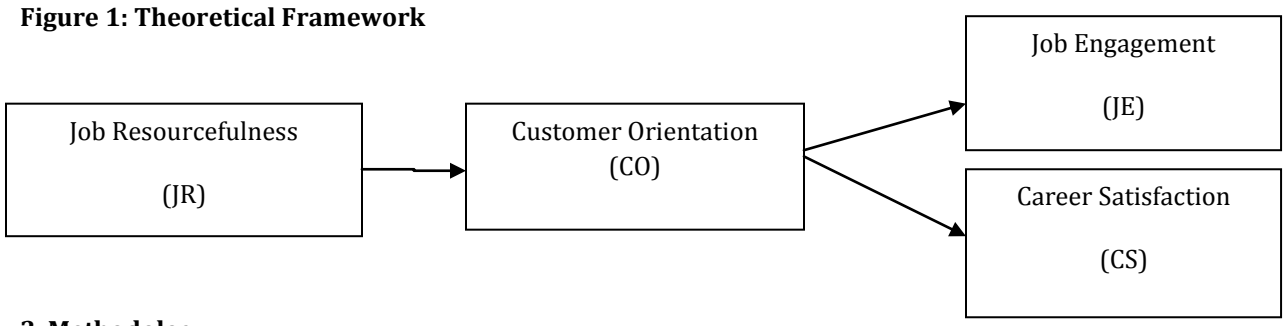

3. Methodology

The population for this study compromised of employees working in hospitality industry. Unit of analysis was an individual. Participants were assured that information will be used for research purpose only. We personally delivered set of printed questionnaires. A convenient sample of 300 employees was approached in hospitality industry located within twin cities of Pakistan (Rawalpindi and Islamabad) by contacting their HR managers. However, 257 questionnaires that were completely and properly filled were used only in the study, rest were discarded. A five point Likert type scale was used where 1= strongly disagree, and 5= strongly agree.

Measures: Four items were used to measure job resourcefulness (Harris, Artis et al. 2006). Four items were used to operationalize customer orientation (Licata, Mowen et al. 2003). Five items from career satisfaction scale (Greenhaus, Parasuraman et al. 1990). Finally nine items scale of job engagement developed was also used (Schaufeli, Bakker et al. 2006). The questionnaire consists of 2 parts with section A and B. Section A consist of items seeking demographics gender, experience level. Section B consists of the items. Analysis was conducted using two steps, in first step confirmatory factor analysis was performed in which model fitness and factor loadings were considered. In the second step structural model is tested.

4. Results

Table 1: Descriptive statistics

Demographic characteristics		Frequency	Percentage
Gender	Male	175	68.1
	Female	82	31.9
Age	18-24	65	25.3
	25-34	117	45.5
	35-44	63	24.5
	45-54	12	4.7
Experience	Less than 5 years	110	42.8
	5-10 years	109	42.4
	11-15 Years	24	9.3
	More than 15 years	14	5.4
Education	Bachelor's degree or below	100	39
	Master's degree or above	157	61

Demographic Analysis: Table 1 shows that the percentage of male respondents is 68.1 and the percentage of female respondents is 31.9. The table further shows that majority of employees fall in age bracket of 25-34 years. Majority of employees had less than 10 years of experience. Finally the table shows that majority of the respondents have Masters or higher degree holder.

CFA - Factor Loadings: In the first step CFA was performed. Model fitness was good. CMIN/Df= 2.053, CFI=0.901, IFI=0.903, RMSEA = 0.064. Table 2 shows that all the factor loadings are significant and greater than 0.50, therefore all of these items were used in the analysis (except, one item from career satisfaction was deleted due to its low loading). There is convergent validity between the items(Anderson and Gerbing 1988) Moreover, using different X^2 difference tests ($p < 0.01$) employing measures of each pair of variables, discriminant validity was also calculated. For each pair of constructs, a two-factor CFA model was examined. Then, a single factor solution was enforced through forcing the various items measuring the variables. By doing so, the model fit significantly declined. These results are sufficient to prove discriminant validity (Anderson and Gerbing 1988).

Table 2: Factor Loadings

Latent Variables		Observed Variables	Standardized Estimate	S.E.	C.R.	P
JE	-→	ABSORPTION	.945	.173	6.985	***
JE	→	DEDICATION	.879	.170	7.179	***
JE	→	VIGOR	.664			
ABSORPTION	→	JE6	.546	.122	7.279	***
ABSORPTION	→	JE5	.566	.119	7.482	***
ABSORPTION	→	JE4	.596			
VIGOR	→	JE3	.546	.104	7.191	***
VIGOR	→	JE2	.656	.092	8.173	***
VIGOR	→	JE1	.783			
DEDICATION	→	JE9	.622	.099	8.313	***
DEDICATION	→	JE8	.528	.096	7.203	***
DEDICATION	→	JE7	.721			
CO	→	CO4	.577			
CO	→	CO3	.691	.167	7.934	***
CO	→	CO2	.673	.161	7.810	***

Latent Variables		Observed Variables	Standardized Estimate	S.E.	C.R.	P
CO	→	CO1	.705	.190	8.026	***
JRF	→	JRF4	.685			
JRF	→	JRF3	.670	.106	8.821	***
JRF	→	JRF2	.756	.111	9.565	***
JRF	→	JRF1	.677	.101	8.893	***
CS	→	CS5	.616			
CS	→	CS3	.709	.132	8.544	***
CS	→	CS2	.763	.147	8.905	***
CS	→	CS1	.701	.136	8.489	***

Table 3 provides the values for descriptive statists of study variables. The co-efficient of Cronbach's alpha is on the diagonal in bold letters, in this research the reliability value of all the variables is greater than 0.70(Nunnally 1978) which is satisfactory. This table also shows the relationship between variables. The result shows there is a positive and significant relationship among all the variables.

Table 3: Descriptive, Correlation and Reliability Analysis

Constructs	Minimum	Maximum	Mean	Std. Deviation	I	II	III	IV
I. JR	1	5	3.6500	.84686	(**0.790**)			
II. CO	1	5	3.4695	.87236	.316**	**(0.755)**		
III. JE	1	5	3.6515	.69301	.419**	.652**	**(0.798)**	
IV. CS	1	5	3.5306	.81407	.349**	.432**	.485**	**(0.763)**

**. Correlation is significant at the 0.01 level (2-tailed).

JR= Job resourcefulness, CO= Customer orientation JE= Job engagement, CS= Career satisfaction

Hypotheses testing: In the second step of analysis, structural model was tested. Overall, model fitness of the structural model was good. CMIN/Df= 2.079, CFI=0.897, IFI=0.890, RMSEA = 0.065. Further, the significance and magnitudes of hypothesized relationships were examined. The following table is tested using structural equation modeling technique through AMOS 21 software. The results reveal a positive and significant impact of job resourcefulness on all the three outcomes i.e., job engagement (β= 0.237, p value < 0.001), career satisfaction (β= 0.256, p value < 0.001), customer orientation (β= 0.409, p value < 0.001). These results show that job resourcefulness has the highest impact on customer orientation out of three outcomes followed by career satisfaction and job engagement. The results further show that customer orientation has a positive and significant impact on job engagement (β= 0.661, p value < 0.001) and career satisfaction (β= 0.476, p value < 0.001). These results show that customer orientation is strongly related to job engagement. The same is represented by the structural diagram below. Thus, these hypotheses are accepted.

Table 4: Hypotheses Testing: Main Model

Relationships			Hypotheses	Standardized Estimate (β)	S.E.	C.R.	P	Label
JRF	-→	JE	H1	0.237	.057	3.199	***	Accepted
JRF	→	CS	H2	0.256	.068	3.072	***	Accepted
JRF	→	CO	H3	0.409	.070	4.529	***	Accepted
CO	→	JE	H4	0.661	.128	6.037	***	Accepted
CO	→	CS	H5	0.476	.103	4.858	***	Accepted

Figure 2: Structural model testing

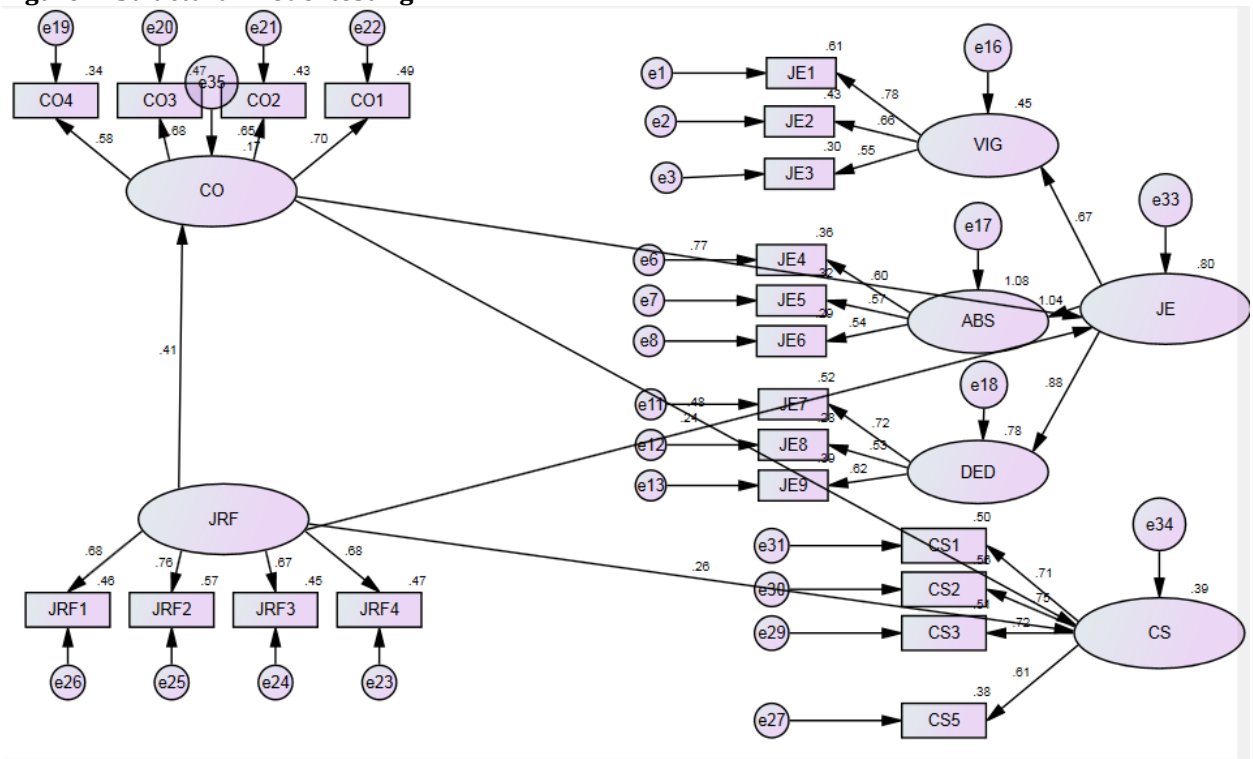

Mediation analysis: This study used two methods to examine the mediating effect of customer orientation on job resourcefulness, job engagement and career satisfaction through (i) Baron and Kenny (1986) and (ii)Preacher and Hayes (2004). Using Baron and Kenny (1986) approach, first a direct model was tested, which comes up with positive effect of job resourcefulness on both job engagement (β= 0.581, p value < 0.001) and career satisfaction (β= 0.495, p value < 0.001). In the next step a second model was tested using customer orientation as a mediator. The results reveal that there were reduction in both beta weights of the effects and both the effects were still significant (job engagement β= 0.237, p value < 0.001; career satisfaction β= 0.256, p value < 0.001), that is an evidence of a partial mediation. Thus, hypotheses H6 and H7 are also supported. To further assess the significance of the mediation, bootstrapping methods were applied. The benefit of testing the indirect effect through the bootstrapping method is that it does not assume that the standard error distribution relates to the indirect outcomes and provides confidence intervals for the estimate. In comparison to the Sobel test, this technique is considered better. The Sobel test assumes that the standard errors have a normal distribution. Using bootstrapping, if the zero falls within the 95% confidence interval, it is established that the indirect effect is significant. The results presented in the last two columns of Table **7.5** were based on 2000 bootstrapped samples. The 95% confidence intervals were accelerated and corrected for bias (Preacher and Hayes 2004). Significantly different indirect effects were apparent in the results from zero at p < .05 (two tailed). It can be concluded that the CO partially mediated the relationship between JR and job engagement and career satisfaction respectively (job engagement β= 0.244, p value < 0.001; career satisfaction β= 0.159, p value < 0.001). Thus, it could be inferred that the job resourcefulness has both direct and indirect effects on positive employee outcomes.

Discussion: The aim of our study was to find impact of job resourcefulness and communication style on employee outcomes (job engagement, and career satisfaction). The study further aimed to examine how customer orientation mediates the interaction between JR and employee outcomes. First and second hypotheses anticipated the positive impact of job resourcefulness on employee outcomes. The hypotheses were substantiated as job resourcefulness has significant positive impact on employee outcomes including job engagement (H1) and career satisfaction (H2) respectively. The review of the literature extensively supports the premise that in environments where employees are more resourceful, job engagement would increase. This was also conclusively established through the results that resourceful employees are highly engaged in their work (Halbesleben 2010);(Hakanen, Bakker et al. 2005). Similarly the second hypothesis is

also substantiated that job resourcefulness is perceived as organizational support lead to career satisfaction (Armstrong-Stassen and Ursel 2009).

Table 5: Hypotheses testing: Mediation Analysis Model

Relationship	Direct relation without mediator	Direct relation with mediator	Indirect relation through bootstrapping	Lower confidence interval (at 95%)	Upper confidence interval (at 95%)	Results
JR-CO-JE	0.581***	0.237***	0.244 ***	0.110	0.490	Partial mediation
JR-CO-CS	0.495 ***	0.256***	0.159 ***	0.062	0.340	Partial mediation

Third hypothesis anticipated that job resourcefulness of service employees has a positive relationship with customer orientation. A resourceful employee is assumed to have better customer orientation due to being more creative and having more initiative (Licata, Chakraborty et al. 2008). The hypothesis was substantiated that JR is significantly related to customer orientation. Fourth and fifth hypotheses anticipated that customer orientation has positive relationship with employee outcomes including job engagement (H4) and career satisfaction (H5). Customer oriented employees tend to make more effort in ensuring that the customer needs are known and met effectively. This provides drive and motivation and increases overall employee engagement and improved career choices. The results of this study substantiate the hypothesis that customer orientation has significant relationship with career satisfaction (Lounsbury, Loveland et al. 2003) and job engagement (Anaza and Rutherford 2012);(Zablah, Franke et al. 2012).Sixth hypothesis anticipated that CO has a partial mediating impact on JR and job engagement. Since other variables that possibly affect the relationship between JR and job engagement, and other aspects of relationship marketing were not considered, partial mediation and limited significance of the indirect relationship was established. The hypothesis was substantiated that customer orientation partially mediates the relation between job resourcefulness and job engagement.

Seventh hypothesis anticipated that CO partially mediates the relationship between JR and career satisfaction. The indirect relationship between JR and employee outcome through customer orientation was significant as compared to the relationship without customer orientation. Therefore, the results of the study supported the hypothesis by showing partial mediation. The overall results prove the basis of the model, postulating that job resourcefulness and positive customer orientation lead to improved employee outcomes. Where organizations provide the support necessary and emphasize customer orientation behavior, employees are willing to show good performance even in the absence of resources. Employees are involved and engaged with their work, they are creative and have higher career satisfaction and increased organizational affinity which leads to improved organizational performance. Involved employees are generally more customer oriented, and utilize resourcefulness to better cater to customers which also leads to improved employee outcomes.

5. Limitations/Future recommendations

The findings are limited to some extent by sample size because of shortage of resources and time constraints. The research may also be done by considering other mediators such as customer satisfaction skills and involving customers to solve problems which are neglected in present study. Future studies may be conducted in other sectors to understand the dynamics of this relationship in more depth and identify other factors contributing towards employee outcomes. Future studies should also examine other outcomes not only on employee level but also customer related outcomes e.g., customer purchase intention, customer buying behavior and customer satisfaction and organizational level including organizational performance and organizational innovation. This study took data on one level only; in future data can be taken from different levels of management.

Implications: In every organization, policies should be adopted to support development and implementation of customer orientation philosophy and practices. Emphasis should be on providing employees with all requisites resources before assigning them any task or duty and while developing expectations from them.

This leads to employees being engaged and involved in work, with work and career satisfaction leading to improved organizational productivity and effectiveness. Organizations must expend due effort towards the development of an environment and climate where employees have higher career satisfaction and therefore are content which leads to an improved sense of engagement, well-being and affiliation. This promotes teamwork and knowledge sharing and will enhance overall job engagement and productivity. The research study suggests that Job resourcefulness and customer orientation are necessary to enhance employee engagement and career satisfaction for organizational development and productivity.

References

Anaza, N. A. and B. Rutherford (2012). How organizational and employee-customer identification, and customer orientation affect job engagement. *Journal of Service Management*, 23(5): 616-639.

Anderson, J. C. and D. W. Gerbing (1988). Structural equation modeling in practice: A review and recommended two-step approach. *Psychological bulletin*, 103(3): 411.

Armstrong-Stassen, M. and N. D. Ursel (2009). Perceived organizational support, career satisfaction, and the retention of older workers. *Journal of occupational and organizational psychology*, 82(1): 201-220.

Babakus, E. and U. Yavas (2012). Customer orientation as a buffer against job burnout. *The Service Industries Journal*, 32(1): 5-16.

Babakus, E., U. Yavas, et al. (2009). The role of customer orientation as a moderator of the job demand–burnout–performance relationship: A surface-level trait perspective. *Journal of Retailing*, 85(4): 480-492.

Bagozzi, R. P. (1992). The self-regulation of attitudes, intentions, and behavior. *Social psychology quarterly:* 178-204.

Bakker, A. B. (2009). Building engagement in the workplace. *The peak performing organization:* 50-72.

Bakker, A. B. & E. Demerouti (2007). The job demands-resources model: State of the art. *Journal of managerial psychology,* 22(3): 309-328.

Baron, R. M. & D. A. Kenny (1986). The moderator–mediator variable distinction in social psychological research: Conceptual, strategic, and statistical considerations. *Journal of personality and social psychology*, 51(6): 1173.

Bettencourt, L. A., K. P. Gwinner, et al. (2001). A comparison of attitude, personality, and knowledge predictors of service-oriented organizational citizenship behaviors. *Journal of applied psychology*, 86(1): 29.

Boles, J. S., B. J. Babin, et al. (2001). An examination of the relationships between retail work environments, salesperson selling orientation-customer orientation and job performance. *Journal of Marketing Theory and Practice*, 9(3): 1-13.

Brown, S. P. and R. A. Peterson (1993). Antecedents and consequences of salesperson job satisfaction: Meta-analysis and assessment of causal effects. *Journal of marketing research*, 30(1): 63.

Brown, T. J., J. C. Mowen, et al. (2002). The customer orientation of service workers: Personality trait effects on self-and supervisor performance ratings. *Journal of Marketing Research*, 39(1): 110-119.

Caponetti, A. R. (2012). The correlates of work role stress with employee burnout, engagement.

Carpenter, M. A. and J. W. Fredrickson (2001). Top management teams, global strategic posture, and the moderating role of uncertainty. *Academy of Management journal*, 44(3): 533-545.

Deci, E. L. and R. M. Ryan (1985). The general causality orientations scale: Self-determination in personality. *Journal of research in personality*, 19(2): 109-134.

Demerouti, E. and R. Cropanzano (2010). From thought to action: Employee work engagement and job performance. *Work engagement: A handbook of essential theory and research*, 65: 147-163.

Donavan, D. T., T. J. Brown, et al. (2004). Internal benefits of service-worker customer orientation: Job satisfaction, commitment, and organizational citizenship behaviors. *Journal of marketing*, 68(1): 128-146.

Edwards, J. R., R. D. Caplan, et al. (1998). Person-environment fit theory. *Theories of organizational stress*, 28: 67.

Farrell, D. and C. E. Rusbult (1981). Exchange variables as predictors of job satisfaction, job commitment, and turnover: The impact of rewards, costs, alternatives, and investments. *Organizational behavior and human performance*, 28(1): 78-95.

Ford, R. C., C. P. Heaton, et al. (2001). Delivering excellent service: lessons from the best firms. *California Management Review*, 44(1): 39-56.

Frazer Winsted, K. (2000). Service behaviors that lead to satisfied customers. *European Journal of Marketing* 34(3/4): 399-417.

Fulford, M. D. and C. A. Enz (1995). The impact of empowerment on service employees. *Journal of Managerial Issues,* 161-175.

Gagné, M. and E. L. Deci (2005). Self-determination theory and work motivation. *Journal of Organizational behavior* 26(4): 331-362.

González-Romá, V., W. B. Schaufeli, et al. (2006). Burnout and work engagement: Independent factors or opposite poles? *Journal of vocational behavior*, 68(1): 165-174.

Greenhaus, J. H., S. Parasuraman, et al. (1990). Effects of race on organizational experiences, job performance evaluations, and career outcomes. *Academy of management Journal*, 33(1): 64-86.

Hakanen, J. J., A. B. Bakker, et al. (2005). How dentists cope with their job demands and stay engaged: The moderating role of job resources. *European journal of oral sciences*, 113(6): 479-487.

Halbesleben, J. R. (2010). A meta-analysis of work engagement: Relationships with burnout, demands, resources, and consequences. *Work engagement: A handbook of essential theory and research,* 8: 102-117.

Harris, E. G., A. B. Artis, et al. (2006). Role stressors, service worker job resourcefulness, and job outcomes: An empirical analysis. *Journal of Business Research*, 59(4): 407-415.

Hartline, M. D. and O. C. Ferrell (1996). The management of customer-contact service employees: an empirical investigation. *The Journal of Marketing,* 52-70.

Hee Yoon, M., S. E. Beatty, et al. (2001). The effect of work climate on critical employee and customer outcomes: An employee-level analysis. *International Journal of Service Industry Management*, 12(5): 500-521.

Hee Yoon, M., J. Hyun Seo, et al. (2004). Effects of contact employee supports on critical employee responses and customer service evaluation. *Journal of Services Marketing*, 18(5): 395-412.

Hennig-Thurau, T., K. P. Gwinner, et al. (2004). Electronic word-of-mouth via consumer-opinion platforms: what motivates consumers to articulate themselves on the internet? *Journal of interactive marketing* 18(1): 38-52.

Hennig-Thurau, T. and G. Walsh (2003). Electronic word-of-mouth: Motives for and consequences of reading customer articulations on the Internet. *International journal of electronic commerce*, 8(2): 51-74.

Heskett, J., W. E. Sasser, et al. (1997). The Service Profit Chain: How Leading Companies Link Profit and Growth to Loyalty, Satisfaction, and Value (Цепочка создания прибыли в сфере услуг: как ведущие компании связывают прибыль и рост с лояльностью, удовлетворением и ценностью).

Homburg, C., M. Müller, et al. (2011). When should the customer really be king? On the optimum level of salesperson customer orientation in sales encounters. *Journal of Marketing*, 75(2): 55-74.

Huang, J.-H. and C.-C. Chang (2008). The role of personality traits in online consumer complaint behavior and service recovery expectation. *Social Behavior and Personality: an international journal*, 36(9): 1223-1232.

Hurley, R. F. and G. T. M. Hult (1998). Innovation, market orientation, and organizational learning: an integration and empirical examination. *The Journal of marketing,* 42-54.

Judge, T. A. and R. Ilies (2004). Affect and job satisfaction: a study of their relationship at work and at home. *Journal of Applied Psychology*, 89(4): 661.

Judge, T. A., C. J. Thoresen, et al. (2001). The job satisfaction–job performance relationship: A qualitative and quantitative review, American Psychological Association.

Karatepe, O. M. (2012). Perceived organizational support, career satisfaction, and performance outcomes: a study of hotel employees in Cameroon. *International Journal of Contemporary Hospitality Management*, 24(5): 735-752.

Karatepe, O. M. and B. G. Douri (2012). Does customer orientation mediate the effect of job resourcefulness on hotel employee outcomes? Evidence from Iran. *Journal of Hospitality and Tourism Management*, 19(1): 133-142.

Lewig, K. A. and M. F. Dollard (2003). Emotional dissonance, emotional exhaustion and job satisfaction in call centre workers. *European Journal of Work and Organizational Psychology*, 12(4): 366-392.

Licata, J. W., G. Chakraborty, et al. (2008). The consumer's expectation formation process over time. *Journal of Services Marketing,* 22(3): 176-187.

Licata, J. W., J. C. Mowen, et al. (2003). On the trait antecedents and outcomes of service worker job resourcefulness: A hierarchical model approach. *Journal of the Academy of Marketing science*, 31(3): 256-271.

Liden, R. C., S. J. Wayne, et al. (2000). An examination of the mediating role of psychological empowerment on the relations between the job, interpersonal relationships, and work outcomes. *Journal of applied psychology,* 85(3): 407.

Locke, E. A. (1969). What is job satisfaction? *Organizational behavior and human performance* 4(4): 309-336.

Lounsbury, J. W., J. M. Loveland, et al. (2003). An investigation of personality traits in relation to career satisfaction. *Journal of Career Assessment,* 11(3): 287-307.

Macintosh, G. (2007). Customer orientation, relationship quality, and relational benefits to the firm. *Journal of Services Marketing*, 21(3): 150-159.

Nunnally, J. (1978). Psychometric methods, New York: McGraw-Hill.

Organ, D. W. and J. P. Near (1985). Cognition vs affect in measures of job satisfaction. *International Journal of Psychology*, 20(2): 241-253.

Pettijohn, C. E., L. S. Pettijohn, et al. (2002). The influence of salesperson skill, motivation, and training on the practice of customer-oriented selling. *Psychology & Marketing*, 19(9): 743-757.

Porter, L. W. (1963). Job attitudes in management: IV. Perceived deficiencies in need fulfillment as a function of size of company. *Journal of applied Psychology*, 47(6): 386.

Preacher, K. J. and A. F. Hayes (2004). SPSS and SAS procedures for estimating indirect effects in simple mediation models. *Behavior research methods*, 36(4): 717-731.

Reichheld, F. F., T. Teal, et al. (1996). *The loyalty effect,* Harvard business school press Boston, MA.

Rich, B. L., J. A. Lepine, et al. (2010). Job engagement: Antecedents and effects on job performance. *Academy of management journal*, 53(3): 617-635.

Salanova, M., S. Agut, et al. (2005). Linking organizational resources and work engagement to employee performance and customer loyalty: the mediation of service climate. *Journal of applied Psychology*, 90(6): 1217.

Saxe, R. and B. A. Weitz (1982). The SOCO scale: A measure of the customer orientation of salespeople. *Journal of marketing research,* 343-351.

Schaufeli, W. B. and A. B. Bakker (2004). Job demands, job resources, and their relationship with burnout and engagement: A multi-sample study. *Journal of organizational Behavior*, 25(3): 293-315.

Schaufeli, W. B., A. B. Bakker, et al. (2006). The measurement of work engagement with a short questionnaire: A cross-national study. *Educational and psychological measurement*, 66(4): 701-716.

Schaufeli, W. B., M. Salanova, et al. (2002). The measurement of engagement and burnout: A two sample confirmatory factor analytic approach. *Journal of Happiness studies*, 3(1): 71-92.

Schaufeli, W. B., T. W. Taris, et al. (2008). Workaholism, burnout, and work engagement: three of a kind or three different kinds of employee well-being? *Applied Psychology*, 57(2): 173-203.

Schneider, B. and D. E. Bowen (1993). The service organization: Human resources management is crucial. *Organizational Dynamics*, 21(4): 39-52.

Sergeant, A. and S. Frenkel (2000). When do customer contact employees satisfy customers? *Journal of Service Research*, 3(1): 18-34.

Stock, R. M. and W. D. Hoyer (2002). Leadership style as driver of salespeoples' customer orientation. *Journal of market-focused management*, 5(4): 355-376.

Van den Broeck, A., M. Vansteenkiste, et al. (2008). Explaining the relationships between job characteristics, burnout, and engagement: The role of basic psychological need satisfaction. *Work & Stress*, 22(3): 277-294.

Weiss, H. M. (2002). Deconstructing job satisfaction: Separating evaluations, beliefs and affective experiences. *Human resource management review*, 12(2): 173-194.

Yavas, U., O. M. Karatepe, et al. (2011). Do customer orientation and job resourcefulness moderate the impact of interrole conflicts on frontline employees' performance? *Tourism and Hospitality Research*, 11(2): 148-159.

Zablah, A. R., G. R. Franke, et al. (2012). How and when does customer orientation influence frontline employee job outcomes? A meta-analytic evaluation. *Journal of marketing*, 76(3): 21-40.

Zhu, Z., C. Nakata, et al. (2007). Self-service technology effectiveness: the role of design features and individual traits. *Journal of the Academy of Marketing Science*, 35(4): 492-506.

Information Management and Business Review (IMBR)
Vol. 9, No. 6, December 2017 (ISSN 2220-3796)

A Study of Factors Affecting Consumer's Willingness to buy Counterfeit Products

Khalid Jamil[1*], Muhammad Asghar Ali[2], Naeem Akram[3]
[1]Govt College University, Faisalabad, Pakistan
[2]International Islamic University Islamabad, Pakistan
[3]National University of Modern Languages, Islamabad, Pakistan
khalidjamil29@yahoo.com[*], asghariqbal68@yahoo.com, Capita4u@gmail.com

Abstract: The progress of this study is to offer and test models that include models of leadership of customer behavior and willingness to deliberately purchase luxury fashion items. The impact of many social, psychological and social emergencies has been identified and recognized. To narrow this gap, the study was conducted to identify key milestones in the readiness to buy counterfeit products in Pakistan. The survey was conducted by 257 people from three major markets in Pakistan, such as Lahore, Faisalabad and Islamabad. In addition, the SEM technique is used to test the hypothesis. The study ends with some contributions and findings. Economic benefits, past experience and materialism of counterfeiting play an important role in the pursuit of counterfeit products. While the hedonic benefits were not as important as hypothetical. The study identifies the leading determinants of lying and willingness to buy fake products by testing a wide range of literature and theories on consumer behavior and marketing. From the point of view of managers, stylish fashion makers will gain insight into the factors that play a key role in counterfeiting. However, a little of this study was revised on the basis of the regional context. From a theoretical point of view the theoretical theory is encouraged to enter into the literary literature relating to purchasing decisions.

Keywords: *Counterfeit goods, Economic benefits, Hedonic benefits, Materialism, Willingness to buy counterfeits, Attitude towards counterfeits*

1. Introduction

Consumer life is represented by a brand. Several studies have confirmed that it does not just bother with a super block for the use of this brand. The role of the different brands changes dramatically, as the brand is a sign of quality and reliability (Chernev, Hamilton, & Gal, 2011) provides its clients with additional symbolic meaning for their lives and personality . Beyond the main features of the product. These brands have no meaning, they have a social meaning, people use marks to manifest themselves to try to develop different ideas for people for themselves. Wealth is a key factor in identity. People take social, psychological and hedonic benefits from brands. According to Louis Vuitton (LV) Chief Executive Officer, "luxury goods are unusual products of ordinary people and amazing products." Chief Executive Officer of Louis Vuitton, 1988-1995. Explore the history of fraud. He returned for 40 years (Veloutsou & Bian, 2008). When Levy was the first time that jewelry production in Asia is largely made, it is labeled and widely distributed in Western Europe (Tifferet & Herstein, 2012). Only a few manufacturers of expensive products and stylish textiles, jewelry and spare parts were affected at the time. It is considered an unnecessary phenomenon. Since then, counterfeit goods have been available in almost every corner of the globe. Trends in fashion, such as watches, wallets, wallets, wallets, and shoes, are growing at many levels. It is now established as a global economic problem. International Fake Anti-Federation Federation sees that the act of fraud will be responsible for about $ 200 billion annually in lost jobs and tax loss sales (Furnham & Valgeirsson, 2007). Fraud becomes a dangerous cause that penetrates the entire economic and social process (Prendergast, Hing Chuen, & Phau, 2002). Southeast Asia is a growing market for the production and trade of counterfeit goods. The study is more important because there have been no studies conducted in the local context, in line with the use of counterfeit clothing so far. The amount of counterfeited goods has risen sharply worldwide. The International Trade Commission (ITC) has estimated that the sale of counterfeit products has increased from $ 5.5 billion in 1982 to over $ 500 billion in 2009, and this trend may be a long time. Pakistan is expected to become a fake luxury user. Because luxury goods provide a situation, personal satisfaction and significance beyond the functionality of the product (Grossman & Shapiro, 1988).

2. Literature Review

Markers play an important role in building a user identity and its role is changed from a device feature. Social media has changed the role of the user in creating and understanding the product naming process.

Economic benefits: More and more users are interested in the useful life of the product, they think of longevity and the reliability of the product at a high frequency, especially when the product is a function (Khan, Shabbir, & Majeed, 2017). Vulnerable consumers also find another advantage in their low-cost purchases. The two main benefits are: economic benefits and benefits. When the false value has a small percentage. False users found an appreciation of economic benefits (Gabriel Taquini, 2016) as well as the difference between the price and the quality of the fake and the original. The choice always depends on the client (Gentry, Putrevu, & Shultz, 2006). Consumers choose their ability if they decide to idols, and from that point on they do not take care of the quality of counterfeits (Nia & Lynne Zaichkowsky, 2000).
H_1: As consumers take real economic benefits from counterfeit purchases, they will have more positive attitude towards counterfeits.

Hedonic Benefits: It is also learned that consumers buy counterfeit products not only for economic benefits but also take advantage of other brands such as logos, celebrities, celebrities and celebrities. In addition, they are related to the brand. Such benefits are known as people who are called (Yoo & Lee, 2009). Fraud is a better and cheaper option when consumers are looking for hedonic benefits from certain requirements; They are less concerned about the quality of fraud. The style and design of fake questions for customers during the purchase decision. The appearance and awareness of fake costumes come with the ability to fulfill a short-term goal. Therefore, these benefits, which are sought by fake consumers, can be positively linked to false buying intentions. This relationship can be hypothesized as:
H_2: As consumers take better hedonic benefits from counterfeit purchases, they will have more positive attitude towards counterfeits.

Materialism: According to Thorstein Veblen, a well-known economist and sociologist on Theory of the Free Class (1899), wealth gathering is not a status. The situation is more than proof of wealth. Showing this wealth requires a lot of money to spend too much money that is considered meaningless. Such behavior, which shows the loss of wealth, is known as the use of masterpieces. It's about spending money on less honest and the most important thing, with the only intention of attracting attention and gaining prestige and social status (Veblen, 1899/1994). It begins in the Middle Ages when it is predetermined by the Acculturative Law that people in social classes can hold up to a certain limit of the value of the currency. Different types of clothing and different types are available to the groom and the western. Most of the classrooms are forbidden to dress with gold, embroideries, diamonds and nails (Tynan, McKechnie, & Chhuon, 2010). The logic behind all these ceilings is simple. Make certain social classes sensitive and prominent in the social ladder. This is evident from Elizabeth I's earrings blanket (1533-1603), a remarkable proof of divinity and its status in society (Belfanti, 2017). Branded brands such as Gucci, Rolex, Bottega Veneta, Coach Louis Vuitton are targeting the elites who believe in the use of rank. It is believed that Veblen (1899, 1953) explores for the first time the "state" in the theory of entertainment. Apparel has been found to be an important indicator of the situation. Most consumers buy clothes to highlight their privileged position, reflecting the vacancy and independence of their work commitments. His economic ideas on Veblen describe how people usually buy products to demonstrate their extraordinariness and to feel a status for themselves and for others, as well as (Packard, 1959a) & (Belk, 2003). "Good reputation in the industrial community, whose ultimate order is based on a strong factor, and by showing the power and authority to obtain or maintain a good name is fun and the use of the goods."Thorstein Veblen the Theory of the Leisure Class (p. 51)
H_3: As the consumers believe more in materialism, they will have more positive attitude towards counterfeits.

Past-Experience: Behavior in the past is considered a precursor to future behavior compared to other effects of perceptions and intentions of behavioral management (El Din & El Sahn, 2013). If the behavior is repeated, it will be a habit. Future behaviors based on past experience or mental behavior. So, the experience of previous counterfeit purchases is expected to bring the intention to buy users as a fake again. Unlike fake shopping buyers, shopping, and they did not consider buying some jewelry as.

H_4: As the consumers have much pleasant past purchase experience of counterfeits, they will have more positive attitude towards counterfeits.

TRA was proposed by Eisen and Reesbein (1980) to present the theory of prudent action (TRA). He speaks of three main areas. Behavior (BI) Behavior, Attitudes and Subjective (SPP) theory suggested BI is the result of man's behavioral attitude and SN. BI is nothing but the power of his intention to perform certain behaviors. Very convincing behaviors about the effects of behavior by multiplying by evaluating these results. SN has individual expectations and aims to meet expectations. However, the validity of the theory may be included if behavior is not deliberately investigated (Sheppard, Hartwick, & Warshaw, 1988). In this study, the theory of reasonable action supports the use of construction as a "readiness to buy counterfeit goods" as an alternative to counterfeit goods.
H_5: As the consumers, have more positive attitude towards counterfeits, they will have stronger willingness to buy counterfeits

Willing to buy counterfeits: Hull (1884-1952) refers to the theory of individual incentives, motivated by the motivation to undertake concrete actions for moderate frustration caused by unnecessary needs. Critical critics argue that this theory confronts only a biological need. Most of the time; Human attitudes are not fully motivated by physiological requirements. Let's take another situation. People often eat food even when they do not feel hungry. Allow critics to come here, the scope and benefits of this theory can be expanded by considering unnecessary social and psychological needs and the human breath to reduce this strain.

Figure 1: Proposed conceptual model for Antecedents of Willingness to Buy Counterfeit Products

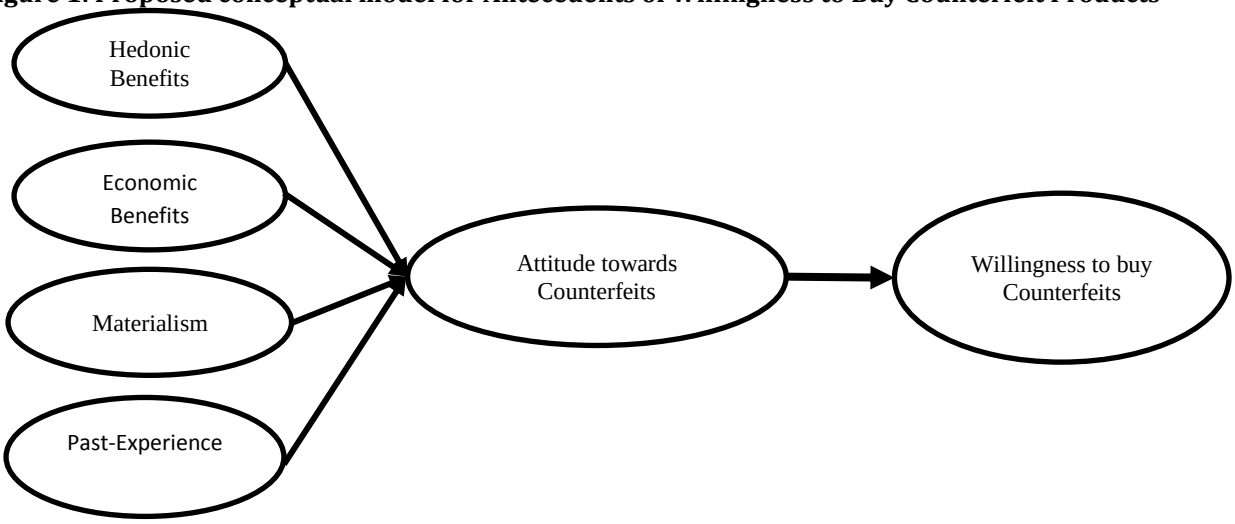

3. Methodology

For this study, the anecdotal antecedents of buying intent for the counterfeit luxury goods were tried to be revealed. It was getting more like an exploratory study as few of the constructs were not very well defined and measured. These dynamics of willingness to buy or purchase intent for counterfeit luxury goods were felt under-researched in the consumer markets of Pakistan. The quantitative technique of research was opted when data is collected in numeric format and different statistical and mathematical techniques are implanted to analyze the data. It also refers to the systematic empirical investigations of any phenomena via statistical, mathematical/computational techniques with objective to develop and employ mathematical models, theories and hypotheses related to the phenomena (Blumberg, Cooper, & Schindler, 2008).

Table 1: Internal Consistency of constructs

Scale	Developed by	Internal Consistency
Willingness to buy counterfeits	Bai, Law, and Wen (2008)	0.88
Attitude towards Counterfeits	Huang, Lee, and Hsun Ho (2004)	0.82
Materialism	Richins and Dawson (1992)	0.81
Benefits	Yoo and Lee (2009)	0.84
Past-Experience	Yoo and Lee (2009)	0.75

Data collection research tools are tests created with a variety of interactive issues to measure shared use constructions such as behavioral counterfeit products and readiness to buy counterfeit goods (Sekaran, 2003). This data was collected by the researchers with the help of three researchers. These associates are master's students at the largest state university in Punjab, Pakistan, who are very interested in market research and marketing. They belong to three different large cities in Pakistan. Faisalabad, Lahore and Islamabad. These cities are considered to be the largest consumer market. The study questioned the intention to buy fake clothes that are largely supported by literature and are considered a luxury fashion for almost every culture around the world. Previous studies have shown that consumers are buying. (Blok, Bush and Campbell, 1993 Kung, Yaw, Lee, Son and Allen, 2003; Phau & Lau, 2001; Wee, Ta, Cheok, 1995). Sample size of this study was initially targeted to 300, around 100 consumers from each market. Three hundred consumers were accessed to fill in the questionnaires. Few of those were reporting missing values, which were discarded later. In the last, 257 questionnaires were found useful yielding a response rate of 85.67%. It took more than three and half months to reach said response rate (Min & Mentzer, 2004). Non-Probability sampling more precisely judgmental sampling and convenient sampling were executed in the pilot study.

Table 2: Constructs adoption and their Definitions

Construct	Definition	Source
Willingness to buy (WTB)	The desire of consumers to make a purchase of counterfeit goods	(Bai et al. (2008); Ramayah, Lee, & Mohamad, 2010)
Attitude toward Counterfeit (ATT)	Consumers' psychological tendency to behave in a consistently favorable or unfavorable manner with respect to counterfeit goods	(Mathieson, Peacock, & Chin, 2001; Van der Heijden, 2004)
Benefits	All positive outcomes generally promoting the wellbeing, taken or expected to be taken from any decision	Yoo and Lee (2009)
Materialism	Materialism is a set of centrally held believes about the importance of possessions in one's life	Richins and Dawson (1992)
Past-Experience	Observation of or participation in an event based on knowledge	Yoo and Lee (2009)

All the constructs were measured by 5-item Likert Scale; (1=strongly disagree, 2=disagree, 3=neutral, 4=agree and 5=strongly agree). All the scales were already developed and established. Few scales were modified little, according-to the purpose. However, internal consistencies of modified ones were checked duly. Structural Equation Modeling (SEM) was conducted to estimate path values for theorized relationships amongst the constructs. LISREL 8.80 was used for analysis with Maximum Likelihood Estimation (MLE) procedure. Error variances of single-indicator constructs were fixed as -1 average reliability coefficients.

4. Results

Total sample size comprised of 257 respondents, out of which there were 140 males and 117 were females. Males represented 54.5% of the sample; rest was represented by the females. However, majority of the counterfeit users are between 20 to 30 years of their ages. This majority is representing 70% of the users, however, the sizable number (25.3) of the users lie between 31 to 40 years. Respondents above 40 were quite low in number. It is important to highlight that majority of counterfeit users are well educated. 88% of the total counterfeit users are having education either up to graduation level or more than that. The total sample size was consisting of 257 respondents; out of which 28.8% belong to Faisalabad city, 34.6% were from Lahore city and remaining 36.6% were from Islamabad city. The table shows that 45.1% users are earning

either or below Rs. 25,000 /month, 40.1% users are earning between Rs. 26,000 to Rs. 50,000/month. Monthly income of 7.4% users is between Rs. 51,000 to Rs. 75,000. Rests of the users are earning more than Rs. 75,000 a month.

The table-3 corresponds to the respondent's preference which compels them to employ counterfeit fashion goods in their daily life. The result implies that people are conscious about their outlook and they are very sensitive about their perception prevailing among the public. It also amplifies the fact that our people will employ any tool to earn their general respect. It further indicates that brands have pivotal role to determine status in this society and the public wants to try them or try their counterfeit fashion goods to satisfy their desire to rest on higher status. Correlation matrix between variables is given in table-4. The correlation matrix reveals mostly significant correlations between antecedents and attitude as well as willingness to buy counterfeit products. Hedonic benefits, economic benefits, past-experience and materialism showed significant relationship with attitude and willingness to purchase counterfeit products.

Table 3: Demographic Profile of the Respondents (N-257)

		Frequency	Percent
Gender	Male	140	54.5
	Female	117	45.5
Age	20-30	180	70.0
	30-40	65	25.3
	41-50	8	3.1
	51-60	4	1.6
Region/Area of respondents	Faisalabad	74	28.8
	Lahore	89	34.6
	Islamabad	94	36.6
Occupation	Student	104	40.5
	Employed	153	59.5
Education	Higher Secondary	31	12.1
	Graduation	139	54.1
	Post-Graduation	87	33.9
Income	Less than 25K	116	45.1
	26K to 50K	103	40.1
	51K to 75K	19	7.4
	76K to 100K	9	3.5
	Above than 101K	10	3.9

Table 4: Descriptive statistics of constructs

	Mean	Std. Dev	1	2	3	4	5	6
1.Hedonic Benefits	3.1390	.625	1					
2.Economic Benefits	3.5282	.664	.507**	1				
3.Past-Experience	3.5052	.646	.568**	.517**	1			
4.Materialism	3.7782	.594	.467**	.421**		1		
5.ATC	3.5631	.677	.421**	.511**	.638**	.385**	1	
6.WTP counterfeit	3.3862	.741	.347**	.528**	.555**	.264**	.579**	1

**p < 0.01 level, *p < 0.05

In our structural model, the structural relations were included from antecedents to attitude towards counterfeit; and then a path was included from attitude towards counterfeit leading to willingness to buy counterfeit.

Table 5: Average Variance Extracted &Composite Reliability of constructs

Indicator	Average Variance Extracted	Composite Reliability
Hedonic Benefits	0.599	0.699
Economic Benefits	0.699	0.599
Past-Experience	0.750	0.750
Materialism	0.729	0.729
ATC	0.819	0.819
WTP counterfeits	0.730	0.730

The paths were specified according; to the hypotheses 1 – 5. Thus, each of the antecedents was affecting attitude towards counterfeit; and attitude towards counterfeit, in turn, was affecting willingness to buy counterfeit. The model showed a good fit to the data with χ^2 = 59.389(P = 0.0), DF = 25; SRMR = 0.0565; RMSEA = 0.0733; NFI = 0.960; CFI = 0.976; and GFI = 0.963. The model was modified based on modification indices and non-significant paths were removed. The modified model revealed much better fit to the data with χ^2 = 50.940(P = 0.0), DF = 25; SRMR = 0.0559; RMSEA = 0.0637; NFI = 0.965; CFI = 0.981; and GFI = 0.968. The parameter estimates from completely standardized solution along with respective t-values and standard errors.

Table-6: Parameter Estimates

Path from		To	Estimate	Std. Err.	T-value
Economic	→	Attitude toward Counterfeit	0.616**	0.289	2.133
Hedonic	→	Attitude toward Counterfeit	0.071	0.091	0.772
Materialism	→	Attitude toward Counterfeit	0.792*	1.415	1.776
Past-Experience	→	Attitude toward Counterfeit	0.499*	0.274	1.819
ATC	→	Willingness to buy Counterfeit	0.565***	0.11	5.12

***p < 0.01 **p < 0.05 * p < 0.10

The path estimate from economic benefits to attitude towards counterfeit was positive and significant (0.616, p < .05). The path estimate from past-experience to attitude towards counterfeit was positive and significant (0.499, p < .10). Materialism also showed a positive and significant path estimate with attitude towards counterfeit (0.792, p < .10). Overall, the structural model showed significant effects of antecedents on attitude towards counterfeit and on willingness to buy counterfeit. Economic benefits, past-experience, and materialism exhibited positive effects on attitude towards counterfeit.

Discussion: The reason for accepting this hypothesis is simple and easy to understand that if we analyze the demographics of fake users, they usually have no resources. They are young adults who need great demand and admiration in their social circle. They want to show they are smarter and smarter buyers. They spend a lot of money on fake money with the intention of using their resources in the most effective way. When the false value has a small percentage. False users have found admiration for economic benefits (Albers-Miller, 1999). Veblen's economic ideas describe that people usually buy products to show their superiority and high status to themselves and others (Packard, 1959) and (Harrison & Mason, 1992). People who need high quality but do not need financial opportunities to gain prestige and social status rely heavily on counterfeits. False visitors differ from those who do not buy goods and do not see such purchases on the moral route (Hoon Ang, Sim Cheng, Lim, & KuanTambyah, 2001). So the experience of buying from former fake consumers has a positive effect on false behaviors. If the user's previous experience is enjoyable, they will be happy to do it over and over again. Past experience plays an important role in future purchasing decisions. It is also learned that consumers do not buy fake products not only for economic benefits but also have other advantages such as logo, reputation, popularity, etc. Such benefits are known as people who are called (Babin, Darden, & Griffin, 1994). While the amount of counterfeit trade is spread daily in Pakistan where sales and purchases of counterfeit products are common and are not considered illegal. Blazers are also fake consumers. They are not interested in their actions of fake purchases from the moral aspects of the view. False purchases and uses are a common practice in every society of society. If we intend to buy fake luxury

products, it is determined by the circumstances. Such counterfeits are widespread and readily available in many countries compared to the original.

5. Conclusion

Fraudsters are becoming popular all the time. They create their online stores. They have sold counterfeit goods to the actual outdoor situation when the copy of the design is registered. They use the same brand and logo as all product specifications. China and India have a personal situation of fraud. They have managed to exploit their stock, price, and fairness. It is popular in developed countries, for example in development. Some of the fake user does not agree with negative results if they do not respond to unexpected losses caused by counterfeit products (Bian & Veloutsou, 2007). Part of the money suffered by fake losses, which cannot be seen as the loss of intellectual property and other legal procedures. Gross brands such as Ben Wa 2005, James Lee and J. Liga 2001 and 1994 Robert NIA Lynne Zaichkowsky 2000 WilkeZaichkowsky, 1999), declining popularity of the latest prominent brands and the market value of the brand (NIA Lynne Zaichkowsky, 2000).

The new era of consumers is well-equipped with brands. Several studies have confirmed that it not only bothered to influence the update, such as the use of brands (Osaka Castle and McEwen, 2004, and Fox, 2002). The role of different brands can dramatically change as a result of a brand of quality and reliability (Chernev, Hamilton, Gal, 2011, Van Kempen, 2003) provides its customers with the symbolic meaning of symbols and their lives go beyond reality. Required product features. False users are trying to make smart decisions by accepting economic benefits. This hedonistic benefit seems to play a major role behind the fake purchases. The respondents' geographical situation also has problems with their intentions of buying fraud. There is a possibility that a tall customer can rely on fake luxury brands to develop in society. Complex and luxury products are usually falsified in large sizes today. This study is done. Watches, sunglasses, mobile phones / electronic devices, two suits, bags, wallets, shoes and a T-shirt / T-shirt / jeans. These fashion items have become a sign of their reputation and status in modern life. It is limited. Comfort and judgment are fulfilled. These techniques are part of an unlikely sample. The sample cannot exist, not the whole population. The results of missing samples cannot be expanded. The size of the sample is not as big as it should be. The study has shown that a cultural context is important in the design of the brand strategy, and this has to be reversed. It has been found that if a counterfeit is made as a product the most deliverable party cannot be exhausted under these circumstances. Future studies should take account of the brand's role when they want to buy counterfeit products.

References

Bai, B., Law, R. & Wen, I. (2008). The impact of website quality on customer satisfaction and purchase intentions: Evidence from Chinese online visitors. *International journal of hospitality management,* 27(3), 391-402.

Belfanti, C. M. (2017). Branding before the brand: Marks, imitations and counterfeits in pre-modern Europe. Business History, 1-20.

Belk, R. W. (2003). Shoes and self. ACR North American Advances.

Blumberg, C., Cooper, D. & Schindler, S. (2008). Research methods. *Boston: Irwin*, 2, 130-139.

Chernev, A., Hamilton, R. & Gal, D. (2011). Competing for consumer identity: Limits to self-expression and the perils of lifestyle branding. *Journal of Marketing,* 75(3), 66-82.

El Din, D. G. & El Sahn, F. (2013). Measuring the factors affecting Egyptian consumers' intentions to purchase global luxury fashion brands. *The Business & Management Review,* 3(4), 44.

Furnham, A. & Valgeirsson, H. (2007). The effect of life values and materialism on buying counterfeit products. *The Journal of Socio-Economics,* 36(5), 677-685.

Gabriel Taquini, R. (2016). The consumer-to-consumer persuasion: application of rhetorical appeals in consumer's reviews. University of Twente.

Gentry, J. W., Putrevu, S. & Shultz, C. J. (2006). The effects of counterfeiting on consumer search. *Journal of consumer behaviour,* 5(3), 245-256.

Grossman, G. M. & Shapiro, C. (1988). Foreign counterfeiting of status goods. *The Quarterly Journal of Economics,* 103(1), 79-100.

Huang, J. H., Lee, B. C. & Hsun Ho, S. (2004). Consumer attitude toward gray market goods. *International Marketing Review*, 21(6), 598-614.

Khan, A. S., Shabbir, R. & Majeed, S. (2017). Ascertaining The Leading Antecedents Of Willingness To Buy Counterfeit Luxury Fashion Products: An Evaluation And Extension.

Mathieson, K., Peacock, E. & Chin, W. W. (2001). Extending the technology acceptance model: the influence of perceived user resources. *ACM SigMIS Database,* 32(3), 86-112.

Min, S. & Mentzer, J. T. (2004). Developing and measuring supply chain management concepts. *Journal of business logistics,* 25(1), 63-99.

Nia, A. & Lynne Zaichkowsky, J. (2000). Do counterfeits devalue the ownership of luxury brands? *Journal of product & brand management,* 9(7), 485-497.

Prendergast, G., Hing Chuen, L. & Phau, I. (2002). Understanding consumer demand for non-deceptive pirated brands. *Marketing intelligence & planning,* 20(7), 405-416.

Ramayah, T., Lee, J. W. C. & Mohamad, O. (2010). Green product purchase intention: Some insights from a developing country. *Resources, Conservation and Recycling,* 54(12), 1419-1427.

Richins, M. L. & Dawson, S. (1992). A consumer values orientation for materialism and its measurement: Scale development and validation. *Journal of Consumer Research,* 19(3), 303-316.

Sheppard, B. H., Hartwick, J. & Warshaw, P. R. (1988). The theory of reasoned action: A meta-analysis of past research with recommendations for modifications and future research. *Journal of Consumer Research,* 15(3), 325-343.

Tifferet, S. & Herstein, R. (2012). Gender differences in brand commitment, impulse buying, and hedonic consumption. *Journal of product & brand management,* 21(3), 176-182.

Tynan, C., McKechnie, S. & Chhuon, C. (2010). Co-creating value for luxury brands. *Journal of Business research,* 63(11), 1156-1163.

Van der Heijden, H. (2004). User acceptance of hedonic information systems. *MIS quarterly*, 695-704.

Veloutsou, C. & Bian, X. (2008). A cross-national examination of consumer perceived risk in the context of non-deceptive counterfeit brands. *Journal of consumer behaviour,* 7(1), 3-20.

Yoo, B. & Lee, S. H. (2009). Buy genuine luxury fashion products or counterfeits? ACR North American Advances.

Information Management and Business Review (IMBR)
Vol. 9, No. 6, December 2017 (ISSN 2220-3796)

A Study of Casual Relationship of Job Design and Employee's Behavior

Saqib Muneer[1], Khalid Jamil[2*], Muhammad Idrees[2]
[1]University of hail, Hail, Saudi Arabia
[2]Govt College University, Faisalabad, Pakistan
saqibmuneer85@gmail.com, khalidjamil29@yahoo.com, muhammadidreesmalik@yahoo.com

Abstract: Some factors other than higher salaries, compensation benefits and conducive workplace seem to have strong impact on employee's performance i.e. organization citizenship behavior and counterproductive work behavior. Purpose of this study is to examine the impact of job design elements i.e. job enlargement, job enrichment and job rotation on employee's organizational citizenship behavior and counterproductive work behavior in the banking sector of Faisalabad and extent to which this relationship is mediated by motivation. Data was collected from 170 frontline managers of banks. After analysis of data, it was found that that there is a positive and significant relationship between job enlargements, job enrichment on OCB while negative and significant relationship between job rotation and OCB. Negative and significant relationship between job enlargement and CWB, negative but insignificant relationship between job enrichment and CWB while positive and significant relationship was found between the job rotation and CWB. Motivation was partially mediating the relationship between job enlargement, enrichment, rotation and organizational citizenship behavior, while motivation was partially mediating the relationship between job rotation and counterproductive work behavior. This study enhances the existing literature of job design and contributes to research by finding how job design influences the OCB & CWB.

Keywords: *Job Enlargement, Job Enrichment, Job Rotation, Motivation, Organizational Citizenship Behavior, Counterproductive Work Behavior*

1. Introduction

The work plan is an agreement or a reorganization aimed at reducing and overcoming job disruptions and recurring staff recurring. Programs related to task management began to establish scientific management approaches in the 1990s. Frederick Taylor is a well-known theorist, he writes the principles of scientific management. He believes that the job arrangement has set the task, task and responsibility of the task to be done. The purpose of this work arrangement is to promote job satisfaction and achievement by changing the content and process of a specific job so that employees can avoid getting tired (Taylor, 2004). It is assumed that salary is the most important factor to encourage employees. But many studies show that job design is a major influence on workers' incentives. Therefore management needs to consider how to organize work that affects the motivation and efficiency of the staff. The three types of job design are: i. Workplace refinement. Expansion of work and rotation in the workplace has significant implications for labor productivity. So managers should find ways to create jobs (Siruri & Muathe, 2014). Competition costs and large increases in production are the reason for reducing, reducing costs and restructuring; so that the staff of the organization has to do a lot of work before adding more debt to its obligations in the form of expanded, refined and rotational work (Sverke & Hellgren, 2001). Well-designed work helps to achieve two main goals: to get timely and effective employment, as well as motivation and hindrances to staff. If the workplace is well organized, it will benefit both business and labor. Poorly designed work leads to an inability to get a job on time and on a regular basis. Nor does he encourage unfortunate employees on his job. Even though the staff are competent and productive, they are disappointed, disappointed, and disappointed in the work that was designed to be poorly done (Borman, 2004). It is essential to create an enabling environment that is not only suitable for organization processes, but also for people who work in it because they are the assets of the organization. Administrators use different design methods that allow administrators to achieve desired results through motivation and employee satisfaction. Management focuses on aspects of work that meet the organization's goals. Thus, when designing a job design, they must find what is essential to work and staff (Garg & Rastogi, 2006). The design of this work has three main elements: increasing the task of increasing the work and shifting tasks.

2. Literature Review

Job Enlargement: Expanding the labor force means increasing the scope of work by expanding the scope of the task. On the contrary, officials who repeated the same steps for each product carried out different tasks within one unit. Top management always believes that competitive advantage is always the result of much in the department. For this reason, almost all organizations to cope with future challenges are tending to hire staff to implement different types of tasks efficiently. It is estimated that work, routine, boring, and lack of motivation are the reasons why expanding work is used as a way to reduce boredom in the workplace and increase employee motivation and job satisfaction. After analyzing the data collected from responses 534 by explaining and analyzing employment statistics, expansion of involvement was linked to the negative motivation, job satisfaction and commitment of the government in Pakistan. Employed staff has been widened by frustration and its predecessor starts to decline. This work has made staff feel that the organization owns them and considers them an integral part of the organization whose performances are thus enhanced. This shows that productivity is increased by increasing the level of satisfaction and satisfaction that is enhanced by expanding the job by creating a variety of skills in them and giving them a sense of ownership in the organization (Saleem et al., 2012). Job Balance is extremely important for the sustainability of the business because, after achieving a balance between work and private life, meeting workers, and working well. Expanding the workplace and increasing the workplace are two of the major workplace designs designed to motivate employees and create a level of employee satisfaction, which is useful for achieving a balance between work and business sustainability (Sushil, 2014). This expanded work has a positive effect on employee motivation, as staff perceive that they will pay the price to make a specific effort to try to perform well in the organization, providing additional duties. The performance of this staff is enhanced when accompanied by any reward.

Job Enrichment: enriching at work, increasing self-sufficiency, self-control, and self-confidence of workers, which adds to their performance (Saleem, Shaheen and Saleem, 2012)? Education is the most important determinant of resilience to increased labor force. Young employees have failed to create jobs, while older employees are unwilling to accept refined jobs (Colin and Raubolt, 1975). Enhancement of employment creates a method in the mind of an employee to understand what their work, their desire, their work, and their form of satisfaction are (McLean and Sims, 1978). Improvements in the workplace increase employee motivation and productivity, and it also leads to increased employee commitment to achieving goals (Dost & Khan, 2012). A study has been conducted to resolve the issue with Nigerian bankers. The samples were collected from 180 marketing executives was conducted t-tests of these data and the results show that the authority, control, accountability and diversity of the work related to employment, increasing motivation, marketing director demotivation to work in the banking sector in Nigeria is in a better position to make a The (Uduji, 2013). There is an important link between job refinement, expansion and balance of professional life, which enhances employee productivity and enhances productivity, contributes to the sustainability of this globally competitive business. On the other hand, it is beneficial to improve the balance of work life of employees who are so important for staff to have a good time for relaxing with their families (Sushil, 2014).

Job Rotation: Job rotation is a method in which a person moves through a schedule designed to broaden his exposure and enhance their skills. Truly turning jobs helps to become more competitive, staff organizations are motivated by the skillfulness and ability to carry out all tasks that enhance their effectiveness. Using this tool, the foundation of the talent it grows, and employees can move from strength to strength, creating a winning situation for yourself and the company. Ortega (2001) argues that the rotation of this operation, compared to this skill, can improve the organization's learning in this circumstance, when fewer staffs have been trained on the task. Job rotation gives staff the opportunity to acquire new skills and to master the new ways of accomplishing tasks and approving new procedures. This motivates many more, satisfied, and fulfilling their obligations because they believe in trust, leadership and pay attention to reducing boredom and increasing the interests of workers. After getting rid of boredom and becoming more interesting and hardworking, employees are more likely to work towards this task (Naqvi et al., 2013). The positioning of the workplace has a positive impact on employee motivation because the staff understands that they will be rewarded for doing a good job, so try to work well in the organization, learn new skills and apply those skills. Task assigned. Increase productivity and improve organizational performance. Management should focus on the design of a job that is accompanied by a certain motivation and awards for employees (Onimole, 2015).

Motivation: Motivation is a necessity or a desire that makes an act. Motivation in turn means that guarantees, motivations and incentives are limited to actions or processes of reason. Motivation that is defined as such an act of process that gives the motivation that prompts a person to take action. In many cases, the motivation comes from a number of requirements that lead to behavior that leads to some sort of rewarding reward and external inherent reward. Shank, and even (2007), Motivation is the result of a mental process, (Mitchell, 1982), and many studies have demonstrated a performance-driven, climate-enhanced performance that enhances the productivity of staff and organizations (Brown & Leigh, 1996). Individuals who are led to a course of motivation are attention, direction, intensity, and persistence of elemental behavior. Two Points of Incentives are: a) cash prizes; and ii) non-cash prizes, as the person who gets to perform their duties in the workplace. Nград outside the frame, include other factors, rather than monetary conditions, e.g., job expansion, enriching work, and job rotation, which keeps employees interested and does not feel part of the company at all. This practice, the organization is influenced by the many factors that are motivated are the most important factors. The work of the staff in the organization is driven by the necessary or external reward, so if the company employee is more motivated, the result of the company's activities also represents the representative (Ahmad, Wasay, & Jhandir, 2012). Motivation is the most important element for all organizations that achieve excellence, whether they are public or private. Because employees who are motivated to work well lead to increased organizational achievement and achievement. Organizations that do not discourage focused employees cannot increase productivity and achieve organizational goals. To keep the world competitive in motivating the staff of the key factors (Chintallo & Mahadeo, 2013).

Organizational Citizenship Behaviour: Murphy says "performance is synonymous with attitudes and behaviors to achieving the organization's goals." Check out the performance is more attractive. The behavior of this practice is divided into two types, one type is that the behavior that is directly linked to the performance, results and objectives of the organization is clearly defined, can be observed and measured. Another characteristic of behavior is not clearly defined in the organization's system of rewards and punishments, but has a direct effect on the organization's performance, which is called behavior of civilian behavior. It has been found that OCB has been linked positively with the productivity of the unit and customer satisfaction (Podsakoff, White, Podsakoff and Blume, 2009). The importance of attitudes determines me. The negative attitudes in the workplace and the behavior of the citizenship of the organization are so high that the relationship between these two factors is examined in the geographical context of Pakistan and has been found to have a negative relationship between them (UllahBukhari and Ali, 2009). Researchers also noted that staff contacts ensure the health of the organization. So, by improving the organizational attitude of the organization and reducing the bad behavior in the organization's work health (Frost & Koys, 2011). Satisfied with the employment of high employee Zadarzhanost and low absentee have a positive effect on organizational attitudes and labor disputes, and job congestion as a negative consequence of OCB (Signs & Pradhan 2013). Organizational civil behavior can be challenged by staff with respect and acceptance (Peyrat-Guillard & Glinska-Newes, 2014).

Counterproductive Work Behavior: An employee's behavior, which contradicts the legitimate interests of an organization, is called anti-aggressive behavior. This behavior affects organizations and even people working within the organization. Anti-manufacturing behaviors are becoming a constant threat to the organization. There are two types of costs associated with this type of behavior: i) financial expenses, including loss of productivity, claims and reparations, ii) social costs, including dissatisfaction with the work, mental and physical injury. A leading force behind the work attitude may be the lack of training and education, staffing, and a change in their lives, and a number of other factors. Such attitudes can be handled by applying strategies in human resources while selecting, examining their integrity and personality. These types of problems can be avoided by creating and providing balance and sense of organization's sensitivity among staff. Staff attitude is very important to the success of the company in this era. Management should focus on finding the cause of stress in the workplace, and to implement strategies to eliminate employee stress (Aftab and Javed, 2012). Data collected from responses working in 304 UK were analyzed using statistical techniques and found conflicts and threats positively affecting negative attitudes (Boddy, 2014). The successful staff motivates the staff by having more employees, their frustrations, other organizations. Unhappy employees tend to tend to work in bad jobs. Break the rules, long breaks and slow work. Management should focus on reducing this behavior in the organization to maintain and improve employee performance and increase employee motivational incentives to overcome this problem arising from the

negative attitude of the workforce (Bratu, 2015). The world of competitive business today has become a highly-coveted place where the survival of the forest is physically and physically unique. This means that resources should be used to replace the competition, optimism and excellence in all directions.

Research Objectives

- *To investigate the impact of job design on organizational citizenship behavior.*
- *To discover the effect of job design on counterproductive work behavior.*
- *To investigate the mediating role of motivation between job design and organizational citizenship behavior.*
- *To investigate the mediating role of motivation between job design and counterproductive work behavior.*

Conceptual Framework

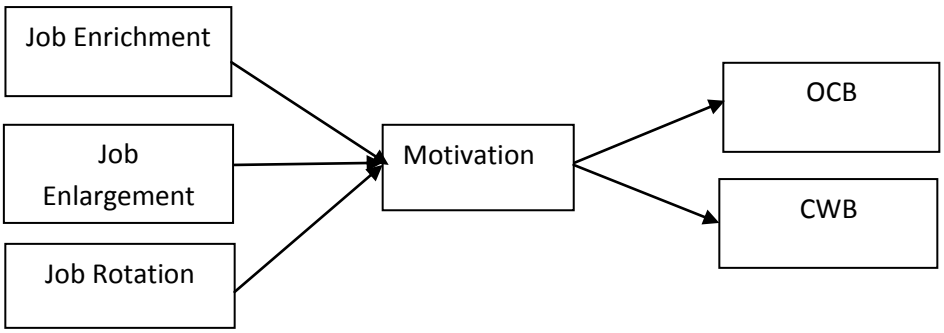

Hypothesis:

H1: Job enlargement is significantly associated with organizational citizenship behaviour.
H2: Job enrichment is significantly associated with organizational citizenship behaviour.
H3: Job rotation is significantly associated with organizational citizenship behaviour.
H4: Job enlargement is significantly associated with counterproductive work behaviour.
H5: Job enrichment is significantly associated with counterproductive work behaviour.
H6: Job rotation is significantly associated with counterproductive work behaviour.
H7: Motivation mediates the relationship between job enlargement and organizational citizenship behaviour.
H8: Relationship between job enrichment and organizational citizenship behaviour is mediated by motivation.
H9: Motivation mediates the relationship between job rotation and organizational citizenship behaviour.
H10: Relationship between job enlargement and counterproductive work behaviour is mediated by motivation.
H11: Motivation mediates the relationship between job enrichment and counterproductive work behaviour.
H12: Relationship between job rotation and counterproductive work behaviour is mediated by motivation.

3. Methodology

Participants: The participation population for the study comprised of different banks of Faisalabad (Pakistan). Participants of the study were frontline managers of the banks. Total distributed questionnaire among the individuals were 200, out of which 170 responses were received. The high turnover of almost 85% is attributed to the involvement of respondent. The unit of analysis was the individuals who responses to the survey.

Measures: In our survey, responses were rated on the Likert Scale format, with answers rating from 1 to 5 (1 = Strongly Disagree to 5 = Strongly Agree). To measure the organizational citizenship behavior (OCB), we used OCB measure developed by Podsakoff (2006). Scale developed by Bennett & Robinson (2002) were used to measure the CWB. Motivation was measured by using the scale of Mckinsey (2002). Job enlargement, job enrichment and job rotation were measured by using the scale used by Ali Muhammad (2004), Venith & Indradevi (2015) and Kokala & Gomathi (2015) respectively. These scales were modified according to the

objectives of the study. Respondents were assured of confidentiality to guarantee the fairness of responses. Respondents were also provided with full explanation of the questionnaire.

Methodology: Following the collection of data, all the data received in the form of individuals responses was punched and a set of analyses were applied i.e. Correlation, regression analysis and sobel test etc to investigate the hypothesis by using the SPSS (version 21.0).

4. Results

We use the linear regression model to analyze the simple effect with the help of SPSS, micro program "process". Steps suggested by Muller, Judd and Yzerbyt were followed in order to test the hypothesis (Muller, Judd, & Yzerbyt, 2005). Multivariate two level model No. 4 sobel test was used for testing the hypothesis with the exploratory variables (X), motivation as mediator (M) while OCB & CWB as Dependent Variable (Y). In the second row of table No. 04 in appendix, it is shown that direct effect of job enlargement on the organizational citizenship behavior is significant and positive with the value of 0.587, p<.01 (H1 accepted). Indirect effect of job enlargement on the organizational citizenship behavior is also significant with the values of 0.146, p<.01. On introducing the motivation as mediator, higher value of total effect (0.732, p>.01) than direct effect and increase in the significance level showed that motivation has partially mediated the relationship of job enlargement and organizational citizenship behavior which furnishes support for acceptance of H7. Third row of above table shows that direct effect of job enrichment on the organizational citizenship behavior is significant and positive with the value of 0.632, p<.01 (H2 accepted). Indirect effect of job enrichment on the organizational citizenship behavior is also significant with the values of 0.423, p<.01. On introducing the motivation as mediator, higher value of total effect (1.055, p<.01) than direct effect and increase in the significance level indicated that motivation was partially mediating the relationship of job enrichment and organizational citizenship behavior. It provides support for acceptance of H8.

In the fourth row of above table, it is shown that direct effect of job rotation on organizational citizenship behavior is significant but negative with the value of -0.229, p<.01(H3 accepted). Indirect effect of job rotation on the organizational citizenship behavior is also significant with the values of 0.615, p<.01. On introducing the motivation as mediator, higher value of total effect (0.386, p>.01) than direct effect and increase in the significance level showed that relationship of job rotation and organizational citizenship behavior has turned positive from negative i.e. 0.615, p<.01 which indicates that motivation is partially mediating the relationship of job rotation and organizational citizenship behavior providing support for acceptance of H9. Last row of above table shows that direct effect of job rotation on counterproductive work behavior is significant but positive with the value of 0.835, p<.01 (H6 accepted). Indirect effect of job rotation on the counterproductive work behavior is negative but significant with the value of -0.528, p<.01. On introducing the motivation as mediator, lower value of total effect (0.307, p>.01) and decrease in the significance level showed that motivation has partially mediated the relationship of job rotation and counterproductive work behavior which provides support for acceptance of H12.

Analyses of Simple Effect of Job Enlargement, Job Enrichment & CWB: In order to test the hypothesis No. 4 & 5 it revealed that there was a significant relationship between job enlargement and CWB (H4 accepted) while insignificant relation was found between the job enrichment and CWB (H5 rejected). To find the mediating effect of motivation in hypothesis No.10 & 11, multivariate two levels model 4 sobel test was used with the exploratory variables job enlargement and job enrichment (X), motivation as mediator (M) and counterproductive work behavior as Dependent Variable (Y). It was observed that in the case of job enlargement and counterproductive work behavior, value of PYM was insignificant with the value of 0.204, p>.05. Because to this, value of indirect effect PYM.PMX was also insignificant with the value of 0.113 hence there was found no mediation between the job enlargement and counterproductive work behavior. Similarly in the case of job enrichment and counterproductive work behavior, value of PYM was insignificant with the value of -0.145, p>.05. Hence indirect effect PYM.PMX was also insignificant with the value of -0.166. Change in R^2 also indicted no change in the strength of model after introducing the motivation as mediator which indicated no mediation between the job enrichment and counterproductive work behavior and provided support for rejection of H10 & H11.

Discussion: The objective of the study was to analyze the impact of job enlargement, job enrichment and of job rotation on the organizational citizenship behavior and counterproductive work behaviors of the frontline managers working in the banking sector of Faisalabad. Mediating effect of motivation on these relations was also tested in this study. Data were collected from the banks across the Faisalabad. After analyzing the collected data through statistical techniques, impact of job design in the context of job enlargement, enrichment and job rotation was examined on the organizational citizenship behavior and counterproductive work behavior. In the case of organizational citizenship behavior, value of R^2 showed the strength of model is 77.2%. It implies that 77.2% variance is shared by these independent variables in the dependent variable i.e. OCB. It was also observed that job enlargement and job enrichment were positively and significantly associated with the OCB with the values of 0.587 and 0.632 respectively at $p<0.01$ while the job rotation was found significant but having negative impact on the OCB with the value of -0.229 at $p< 0.05$. Hence H1, H2 and H3 were accepted (Table No. 02 in appendix). When these three independent variables were examined for their relationship with counterproductive work behavior, value of R^2 showed that the strength of model is 16.8%. It implies that16.8% variance is shared by job enlargement, enrichment and rotation in the dependent variable i.e. CWB. It was also observed that job enlargement was negatively and significantly associated with the CWB with the values of -0.564 at $p<0.01$. Job enrichment was found insignificant having negative relationship with Counterproductive work behavior with the value of -0.216. Job rotation was having positive relationship with CWB with the value of 0.835, $p<0.01$. Hence H4 and H6 were accepted while H5 was rejected (Table No. 03 in appendix).

Mediation effect of the motivation was also checked one by one on OCB and CWB. It was found that in case of job enlargement, motivation partially mediated the relation between job enlargement and OCB. In case of job enrichment motivation was also found partially mediating the relationship. When this relation is checked with job rotation, it is revealed that motivation has also partially mediated the relation between job rotation and organizational citizenship behavior. When the mediation effect was checked for CWB, it was observed that there were no mediation in the relationships of job enlargement and job enrichment, while the motivation partially mediated the relationship of job rotation and counterproductive work behavior. Hence H7, H8, H9 and H12 were accepted while H10 & H11 were rejected. It was observed that job enlargement was positively and significantly associated with the organizational citizenship behavior with the value of 0.587. After introducing the motivation as mediator, this value was increased from 0.587 to 0.732. Job enrichment was significantly and positively associated with organizational citizenship behavior with the value of 0.632 but the mediator i.e. motivation has increased this value from 0.632 to 1.055. Job enlargement and job enrichment have positive and significant relation with OCB. Increase in organizational citizenship behavior causes employee's job satisfaction. As a result, CWB decrease and they began to perform well which helps in achieving the organizational goals.

Job rotation was found to be significantly and negatively associated with organizational citizenship behavior. But after introducing the motivation as mediator, this negative value was turned positive from negative which showed the partial mediation of motivation. Job enrichment is vertical increase in the duties. It means that the employees are assigned duties to perform which are meant for higher posts. Insignificance of job enrichment can be due to enriching the jobs of such persons who have not the caliber, skills and abilities to handle the enriched job or it is also possible that the respondents who have responded to job enrichment statements have never faced enrichment in their jobs and their responses can be result of biasness. Job rotation was significantly and positively associated with counterproductive work behavior with the value of 0.835 and the this relation was also partially mediated by the motivation and motivation decreases the CWB from 0.835 to 0.307 while in cases of job enlargement and job enrichment there were no mediation. Findings revealed that employees take job enlargement and job enrichment as source of removal of boredom, repetitive tasks. Due to charging additional tasks, their jobs become interesting and challenging. Employees take additional task as opportunity to increase their skill and abilities and also consider it helpful in improving their growth opportunities. As a result organization citizenship behavior increases and counterproductive work behavior decreases. While in the case of job rotation, it was observed that job rotation was negatively associated with OCB and positively associated with CWB which showed that employees do not like job rotation but when they were motivated by the management their negative respond to job rotation turned into positive.

In job rotation people are rotated from department to department for performance of different types of jobs in order to learn and improve their skills and abilities and to perform on behalf of others in contingencies and to reduce the hiring cost of new employees. Purpose of the job rotation is to improve the skills of employees but sometimes employees become demotivated and dissatisfied with their job. Resultantly, their organizational citizen ship behavior decreases and counterproductive work behaviors increases. Negative effect of job rotation on the OCB and positive effect of job rotation on the CWB can be due to the reasons that employees become dissatisfied due to continuous move from their basic job to perform other jobs in the same organization. On the other hand, there are number of banking employees having degrees other than MBA or M.Com (concerned with the fields of accounts and finance) so lack of background knowledge become the reason of negatively impact of job rotation on organizational citizenship behavior and positive impact on counterproductive work behaviors which is in confirmation of "Ortega" that job rotation indeed can enhance the learning abilities of the employees in an organization but there must be a little information about the perform to be assigned otherwise employees think that to shift to new job sometimes gives them stress (Ortega, 2001).

According to best of my knowledge and resources, there is no literature available about the impact of job enlargement, job enrichment and job rotation on the organizational citizenship behavior and counterproductive work behaviors. This study has explored this relationship and contributed towards the literature by examining and finding the impact of job enlargement, job enrichment and job rotation on the organizational citizenship behavior and counterproductive work behavior. Findings of this study are also in confirmation of social exchange theory that when employees feel that their organization is caring for their personal growth, advancement and development in performance of their tasks, they feel satisfied and happy with the organization. This way they reciprocate by demonstrating positive attitude and behavior which benefits the organization to achieve the organizational goals.

5. Conclusion

To explain and provide the valuable insight to the studies of job enlargement, job enrichment and job rotation, we have achieved our objectives by investigating the impact of job enlargement, enrichment and rotation on OCB and CWB and how the motivation mediates theses relationship. There is no previous official statistics available for the elements of job design i.e. job enlargement, job enrichment and job rotation with mediating effect of motivation on the organizational citizenship behavior and counterproductive work behavior. This study mainly focuses on the job enlargement, job enrichment, job rotation, OCB & CWB. Results revealed positive and significant relationship between job enlargement and of job enrichment on the OCB while negative and significant relationship of job rotation on the OCB. It was also revealed that there is a negative and significant relationship between job enlargement and CWB, negative but insignificant relationship between job enrichment and CWB while positive and significant relationship between the job rotation and CWB. On the other hand, motivation partially mediates the relationship between job enlargement, job enrichment, job rotation and organizational citizenship behavior, respectively. There were no mediation between job enlargement, job enrichment and counterproductive work behavior, respectively while motivation was found partially mediating the relationship between job rotation and counterproductive work behavior.

Limitations: No research is a 100% perfect. This research involves studying human behavior and we all know that behavior varies from person to person because there are different thought processes in each of us. It is quite possible a factor that motivates one person cannot motivate the other person. This survey was questionnaire based and responses were taken from the different types of people from different backgrounds working in banks. It was difficult to work out a certain pattern of study. Some questions also led the respondents to bias, which might be because, some people think of certain questions in a personal manner and start concealing or overstating information. Limited sample size is also limitation of this study so the finding cannot show the true and fair picture for all the employees working in the banking sector of Pakistan. Sample was taken from the banks of Faisalabad so this study cannot be generalized for all the banks of Pakistan. Banking environment being so busy these days, it was hard to find people who wanted to devote their time sincerely in helping this research.

References

Aftab, H. & Javeed, A. (2012). The Impact of Job Stress on the Counter-productive Work Behavior (CWB) A Case Study from the financial Sector of Pakistan. *Interdisciplinary Journal of Contemporary Research in Business,* 4(7), 590.

Baron, R. M. & Kenny, D. A. (1986). The moderator–mediator variable distinction in social psychological research: Conceptual, strategic, and statistical considerations. *Journal of personality and social psychology,* 51(6), 1173.

Boddy, C. R. (2014). Corporate psychopaths, conflict, employee affective well-being and counterproductive work behaviour. *Journal of Business Ethics,* 121(1), 107-121.

Borman, W. C. (2004). The concept of organizational citizenship. *Current directions in psychological science,* 13(6), 238-241.

Bowling, A. (1997). Data collection methods in quantitative research: questionnaires, interviews and their response rates. *Research methods in health: Investigating health and health services*, 3, 257-272.

Bratu, S. (2015). Are Organizational Citizenship Behaviors (OCBS) Really Positively Associated with Measures of Organizational Effectiveness? *Analysis and Metaphysics*, 14, 87-93.

Brown, S. P. & Leigh, T. W. (1996). A new look at psychological climate and its relationship to job involvement, effort, and performance. *Journal of applied psychology,* 81(4), 358.

Collins, D. C. & Raubolt, R. R. (1975). A Study of Employee Resistance to Job Enrichment. *Personnel Journal,* 54(4), 232-235,248.

Daft, R. (2006). Organization theory and design: Cengage learning.

Dahie, A. M. & Ali, A. A. Teacher Motivation and School Performance, the Mediating Effect of Job Satisfaction: Survey from Secondary Schools in Mogadishu.

Dalal, R. S. (2005). A meta-analysis of the relationship between organizational citizenship behavior and counterproductive work behavior. *Journal of applied psychology,* 90(6), 1241.

Dash, S. & Pradhan, R. K. (2013). Determinants & Consequences of Organizational Citizenship Behavior: A Theoretical Framework for Indian Manufacturing Organisations. *International Journal of Business and Management Invention,* 3(1), 17-21, 2319, 8028.

Dost, M. K. B. & Khan, H. J. (2012). Job Enrichment Causes High Level of Employee Commitment During the Performance of their Duties: A Behavioral Study. *Arabian Journal of Business and Management Review (Oman Chapter),* 1(10), 95.

Dost, M. K. B. & Saleem, S. (2012). The job enrichment causes high level of employee commitment during the performance of their duties: a behavioral study from Pakistan. *Arabian Journal of Business and Management Review (Oman Chapter),* 1(9), 135.

Frost, B. & Koys, D. J. (2011). Organizational Citizenship Behavior, Employer Support, and Unit-Level Outcomes: A Longitudinal Study.

Garg, P. & Rastogi, R. (2006). New model of job design: motivating employees' performance. *Journal of management Development,* 25(6), 572-587.

McLean, A. & Sims, D. (1978). Job enrichment from theoretical poverty: The state of the art and directions for further work. *Personnel Review,* 7(2), 5-10.

Mitchell, T. R. (1982). Motivation: New directions for theory, research, and practice. *Academy of management review,* 7(1), 80-88.

Mohammad, J., Habib, F. Q. & Alias, M. A. (2011). Job satisfaction and organisational citizenship behaviour: An empirical study at higher learning institutions. *Asian Academy of Management Journal,* 16(2), 149-165.

Mohan, K. & Gomathi, S. (2015). The Effects of Job Rotation Practices on Employee Development: An Empirical Study on Nurses in the Hospitals of Vellore District. *Mediterranean Journal of Social Sciences,* 6(1), 209.

Naqvi, S. R., Ishtiaq, M., Kanwal, N. & Ali, M. (2013). Impact of job autonomy on organizational commitment and job satisfaction: The moderating role of organizational culture in fast food sector of Pakistan. *International Journal of Business and Management,* 8(17), 92.

Ortega, J. (2001). Job rotation as a learning mechanism. *Management Science,* 47(10), 1361-1370.

Peyrat-Guillard, D. & Glinska-Newes, A. (2014). I Respect You and I Help You: Links Between Positive Relationships at Work and Organizational Citizenship Behaviour. *Journal of Positive Management,* 5(2), 82.

Podsakoff, N. P., Whiting, S. W., Podsakoff, P. M. & Blume, B. D. (2009). Individual-and organizational-level consequences of organizational citizenship behaviors: A meta-analysis. *Journal of applied psychology,* 94(1), 122.

Podsakoff, P. M., Ahearne, M. & MacKenzie, S. B. (1997). Organizational citizenship behavior and the quantity and quality of work group performance. *Journal of applied psychology,* 82(2), 262.

Podsakoff, P. M., MacKenzie, S. B. & Organ, D. (2006). Organizational citizenship behavior: Its nature, antecedents, and consequences: Sage Publications, Thousand Oaks, CA.

Saleem, S., Shaheen, W. A. & Saleem, R. (2012). The impact of job enrichment and job enlargement on Employee satisfaction keeping employee performance as Intervening variable: a correlational study from Pakistan. *Kuwait Chapter of the Arabian Journal of Business and Management Review,* 1(9), 145.

Shanks, N. H. & Dore, A. (2007). Management and motivation. Fonte: http://www. jblearning. com/samples X, 76373473.

Shaughnessy, J. J. Z., Zechmeister, E. B., Martínez, J. S. G. & Ericka, B. D. B. (2007). *Métodos de investigación en psicología*: McGraw-Hill.

Siruri, M. M. & Muathe, S. (2014). A Critical Review of Literature on Job Designs in Sociotechnical Systems.

Sushil, S. (2014). Role of Job Enrichment and Job Enlargement in Work Life Balance. *Global Journal of Finance and Management,* 6(3), 239-244.

Sverke, M. & Hellgren, J. (2001). Exit, Voice and Loyalty Reactions to Job Insecurity in Sweden: Do Unionized and Non-unionized Employees Differ? *British Journal of Industrial Relations,* 39(2), 167-182.

Taylor, F. W. (2004). Scientific management: Routledge.

Turnipseed, D. L. & Rassuli, A. (2005). Performance Perceptions of Organizational Citizenship Behaviours at Work: a Bi-Level Study among Managers and Employees. *British Journal of Management,* 16(3), 231-244.

Uduji, J. I. (2013). Job Enrichment: A Panacea to the Problem of the Demotivated Marketing Executives in the Banking Industry in Nigeria. *California Management Review,* 16, 57-71.

Ullah Bukhari, Z. & Ali, U. (2009). Relationship between organizational citizenship behavior & counterproductive work behavior in the geographical context of Pakistan. *International Journal of Business and Management,* 4(1), 85.

Appendix

Table 1: Correlation Matrix

Sr. No.	Correlation	1	2	3	4	5	6
1	Job Enlargement	1					
2	Job Rotation	.394**	1				
3	Job Enrichment	.560**	.585**	1			
4	Motivation	.612**	.534**	.550**	1		
5	OCB	.632**	.342**	.545**	.631**	1	
6	CWB	-.304**	.155*	-.154*	-.153*	-.297**	1
	**p < 0.01 *p<0.05						

Table 2: Regression Analysis of Organizational Citizenship Behavior

Model	R	R Square	Adjusted Square	RStd. Error of the Estimate
1	.881	.776	.772	.30045

Model	Unstandardized Coefficients		Standardized Coefficients	t	Sig.
	B	Std. Error	Beta		
Job Enlargement	.594	.048	.704	12.415	.000
Job Rotation	-.100	.051	-.089	-1.951	.053
Job Enrichment	.371	.091	.262	4.068	.000

Table 3: Regression Analysis of Counterproductive Work Behavior

Model	R	R Square	Adjusted Square	RStd. Error of the Estimate
1	.428	.183	.168	1.00877

Model	Unstandardized Coefficients		Standardized Coefficients	t	Sig.
	B	Std. Error	Beta		
Job Enlargement	-.597	.161	-.403	-3.716	.000
Job Rotation	.677	.172	.341	3.929	.000
Job Enrichment	-.118	.306	-.047	-.386	.700

Dependent variable	Mediator	Independent	P_{MX}	P_{YM}	Direct effects (P_{YX})	Indirect effects (P_{YM} P_{MX})	Total effects (P_{YX} + P_{YM} P_{MX})
OCB	Motivation	Job Enlargement	0.555 (.000)	0.262 (0.000)	0.587 (.010)	0.146**	0.732**
OCB	Motivation	Job Enrichment	1.145 (.000)	0.369 (.000)	0.632 (.012)	0.423**	1.055**
OCB	Motivation	Job Rotation	0.682 (.000)	0.903(.000)	-0.229 (.003)	0.615**	0.386**
CWB	Motivation	Job Rotation	0.681 (.000)	-0.774 (.000)	0.835 (.000)	-0.528**	0.307*

Table 4: Analyses of Simple Effect for OCB & CWB
N= 170 * P< .05 **P< .01

Where P_{MX} refers to paths from independent variable to the mediator (motivation) and P_{YM} refers to paths from the mediator to the outcome variable. PYX is the path from X (independent variable) to Y (dependent variable) which is called direct effect of independent variable on the dependent variable. PYM.PMX indicates indirect effect while PYX+PYM. PMXis total effect of X (independent variable) on Y (dependent variable) in the presence of mediator (motivation).

Information Management and Business Review (IMBR)
Vol. 9, No. 6, December 2017 (ISSN 2220-3796)

The Impact of Social Support on Psychological Distress among Khawajasira Community: The Mediated Effect of Self-Efficacy

Hafiz Muhammad Ahmad Abbas, Virdah Iram Gull*, Khalid Ghaffar
The Islamia University of Bahawalpur, Bahawalnagar Campus, Pakistan
ahmadiub@hotmail.com, virdahgull@gmail.com*, kghaffar21@gmail.com

Abstract: Khawajasira is a general terminology used typically in Pakistan that refers to the people who are transgender, hermaphrodite, inter-sexed, eunuch, transvestites, homosexual or bisexual (Brettell & Sagen, 1997). The current study examines the impact of Social Support and Self-efficacy in producing Psychological distress among Khawajasiras. A sample of total two hundred Khawajasiras (N=200) was drawn from the KhawajaSira community living in Southern Punjab. Urdu versions of Psychological Distress Scale K10 by Kessler (2010), General Self-Efficacy Scale (2003) and a 3 item self-created questionnaire were used to measure Psychological distress, Self-efficacy and Social support respectively. To measure reliability of all three scales, reliability analysis was performed. Analysis of data through SPSS suggested significant positive association among Self-efficacy and Social support; Social support and Self-efficacy significantly negatively associated with Psychological distress. Moreover, Social support significantly predicted the Psychological distress in Khawajasiras even after controlling the demographic variables. In KhawajaSira community, association between Social support and Psychological Distress was mediated by Self-efficacy. Suggestions for future research and implications of the study were also discussed.

Keywords: *Psychological Distress, Self-Efficacy, Social Support, Transgender, Khawajasira*

1. Introduction

Khawajasiras were neither considered male nor female, but formally considered as third gender in Pakistan, India and Bangladesh. This term is frequently promoted by transgender social associates themselves and by social workers that may recognize the individual as a transgender, transsexual or a cross-dresser (Pasquesoone, 2014) There are many point of views regarding Khawajasiras in various cultures. Many nations supposed that they possess super-natural powers and sanctifications of God, in contrast some cultures recognized them neither male nor female.Meanwhile not tagged as deviants by possessing reputable positions (Bartlett, Vasey, & Bukowski, 2000).It is claimed that the Khawajasira community in Pakistan has faced several levels of legal, institutional and social discrimination. While, the Constitution of Pakistan protects all citizens by safeguarding their rights, dignity and status; these rights are not translated into laws and protection mechanisms at the state level with respect to vulnerable groups and specifically the Khawajasira community (Aurat Foundation, 2016). The circumstances are more aggravate due to the absence of reverence and reception for these clusters making them societal recluses and grudging them of their fundamental privileges and exposing them to a lot of discrimination, aggravation and violence merely based on their sexual characteristics and distinctiveness. Khawajasira has been a victim of social intolerance in many communities as well as in Pakistani community. Khawajasira which are left out on the streets by her family, who is taunted and ridiculed at every turn, whose sight causes people to turn their gaze, whose pain our world remains indifferent to and whose cries for help, affection and understanding are left unanswered. An entire community of people has been denied their human status for years, only because the society continues to cling to valves based on ignorance (Akhuwat, 2016).

Research suggests that adolescents and adults from sexual minorities develop anxiety, depression, substance abuse, and suicidality at rates that are boosted in contrast with those in the general community (Cochran, Mays, & Sullivan, 2003). Accordingly, psychosocial distress may represent the diverse rates of depression, hopelessness, and current suicidality as seen among gay, lesbian, and cross-sexual young people and their hetero peers. Studies in the US and Netherlands indicates a critical relationship among stigma, prejudice, discrimination and poor psychological well-being (Sandfort, Graaf, Bijl, & Schnabel, 2001).Similarly, growing up gay, lesbian, indiscriminate, or sex nonconforming broods are at risk for certain psychological wellness issues, a large portion of which are altogether corresponded with disgrace and biasness (Adelson, 2012). Bariola, et al. (2015) identified that age, poor family support and being victimized are associated with high psychological distress while, being connected with LGBT peers and high income were associated with high

resilience.A sample of 1093 (N=1093) Transgenders in US in order to examine the connection between mental health and minority stress. Their study found that 44.1% of the total sample having severe clinical depression, 33.2% having anxiety whereas 27.5% were having somatization. They found the positive relationship between psychological distress and social stigma. Further, Social support had a moderating effect on that relationship.

Moreover, there are no known grassroots activism among lesbian, gay, bisexual and transgender (Khawajasira) communities in Pakistan (International Gay and Lesbian Human Rights Commission, 2008). Lack of activism, silences around sexualities and deeply closeted society in Pakistan makes it difficult to accurately assess the living conditions of Transgender and Human Rights situation among LGBT community. Furthermore, in Pakistan, the topic of Khawajasiras did not discussed due to the controversial nature of the topic and typical mind set of the people. Almost all population do not accept them as a part of their society. So, in Pakistan, Khawajasiras faced severe rejection most of the time. One study on transgenderism stated thatalmost1 out of fifty children are identified with tendency to behave like Khawajasiras. Transgenderism affected two percent of population in Pakistan (Akhtar, 2016). In our community, most of the time families identified Khawajasiras. Society most of the time mistakenly assumed them as pre-homosexuals; so, families behave aggressively with Khawajasiras. Families tend to strictly warn the transgender child to change his attitude, which he cannot comply thus ultimately results in abandonment of transgender children by their loved ones.

2. Methodology

Table 1: Demographic Descriptive of Sample (N = 200)

Variables	*f (%)*
Age	
Below 18 years	18 (9%)
18 to 25 years	82 (41%)
26 to 30 years	36 (18%)
31 to 35 years	35 (17.5%)
36 to 40 years	23 (11.5%)
Above 40 years	6 (3%)
Education	
Under Primary	101 (50.5%)
Primary to Middle	68 (34%)
Middle to Matric	31 (15.5%)
Matric or Above	
Working Duration in the Field	
Less than 2 years	49 (24.5%)
2 to 5 years	62 (31%)
6 to 8 years	64 (32%)
More than 8 years	25 (12.5%)
Monthly Income	
Rs. 5000 or less	18 (9%)
Rs. 5100 to 8000	85 (42.5%)
Rs. 8001 to 10000	51 (25.5%)
More than Rs. 10000	46 (23%)

The present research is a quantitative study based on cross sectional survey design. Sample size consists of two hundred (N=200) Khawajasiras from district Bahawalnagar. The researcher was intended to check the effect of Social Support[1] on Psychological distress among Khawajasiras. Furthermore, the impact of Social Support on Self-Efficacy among Khawajasiras was also explored. Urdu version of Kessler Psychological

[1]*Social support i.e. from biological family, Khawajasira community and society in general.*

Distress Scale (K10) originally developed by R.C. Kessler in 1992 translated by Ghafoor, Sitwat, and Kausar (2010) was used to examine the level of Psychological Distress. Urdu version of General Self-Efficacy Scale (GSE) primarily constructed by Ralf Schwarzer and Matthias Jerusalem in 1995 translated by Tabassum, Rehman, Schwarzer and Jerusalem (2003) was used in the current study to determine self-efficacy level. Questions were added to access the social support after the measurement of reliability that was proved significant. Demographic variables; age, education, duration of work in the field and monthly income were added. The scales were used with the permissions of both, original authors and translators.

3. Results

Table 2: Descriptive of Variables and Alpha Reliability Coefficient of Scales (N=200)

Scales	K	M(SD)	α
Psychological Distress Scale	10	29.41 (12.43)	.96
Self-Efficacy Scale	10	23.13 (9.16)	.96
Social Support	3	7.72 (1.82)	.61

Note: M = Mean; SD = Standard Deviation; α = Alpha Reliability; K = Number of Items

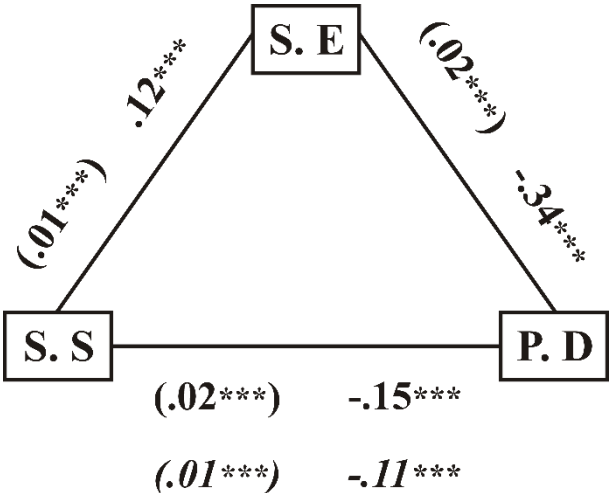

Figure 1: Mediation Analysis for the Sample regarding Social Support through Hierarchical Regression

Note: Italicized values= second analysis, P. D= Psychological Distress, S. E= Self-Efficacy, S. S= Social Support. Control Variables = Age, Working Duration in the Field, Education, Monthly Income.
**** = P<.001*

A variable is considered a mediator when its presence lessens the significant relationship between two other variables (Baron and Kenny,1986). In the current model, in first step covariates of the study was controlled to roll out the confounding. In first step of the analysis in hierarchical regression control variables predict significantly psychological distress in the sample ΔR^2 =.90; F=358.47, p<.001; Category β=-.89, p<.001; working duration in the field β= -.10, p<.001. Social support significantly predicted 2% variance in psychological distress (β=.15, p<.001). Social support significantly predicted 1% variance in self-efficacy (β=−.12, p<.001). Furthermore, self-efficacy significantly predicted 2% variance psychological distress (β= -.34, p<.001). When self-efficacy was controlled, the effect of social support on psychological distress was reduced for the sample (β= -.11, p<.001). Sobel's test revealed that self-efficacy significantly reduced the association between social support and psychological distress (z= -3.27, p<.001). Thus, self-efficacy significantly partially mediated the relationship between social support and psychological distress in the sample.

Summary of Findings

- The reliability of total scales ranges from .61 to .96.
- Social support explained 2% variance in Psychological distress after controlling the covariates and it was significant.
- Social support explained 1% variance in Self-efficacy and it was significant.
- Self-efficacy explained 2% variance in Psychological distress and it was significant.
- Self-efficacy partially mediates the relationship between Social support and Psychological distress.

4. Conclusion

Fiori, McIlvane, Brown and Antonucci (2006) conducted study on association among quantity and quality of Social relation and depressive symptomology. They also find the possible mediating role of Social and general efficacy.Their results proved that depressive symptoms were influenced by social relations and Self-efficacy provides a mechanism through which social relations affect symptoms of depression. Wright and Perry (2006) reported in a study that Psychological distress is correlated with sexual identity distress, less drug abuse and less usage of alcohol. In youth, severity of sexual identity distress reduced when they have strong support network. Domínguez-Fuentes, Hombrados-Mendieta and GarcÍa-Leiva(2012) analysed the social support data and life satisfaction in a sample of 220 (N=220) gays. Their findings proved that friends are big source of Social support. In family situation, sister gives more support and in turn life-satisfaction increased. So, they conclude that life satisfaction is affected by Social support.Data analysis proved that Social Support has a significant impact on both, Psychological Distress and Self-Efficacy. Khawajasiras that had high Social Support were high in Self-Efficacy and low in Psychological Distress. These findings of the study are similar to the previous researches e.g. Bariola, et al.(2015) and Bockting, Miner, Rebecca, Hamilton and Coleman(2013).Wang, Cai, Qian and Peng(2014) conducted a study to find the role of Social support in association between Stress and Depression. They found that high Stress is associated with high Depression and with low Social support in undergraduates. Those undergraduates who reported low Stress were also low on Depression but high on Social support. So, study results proved that Social support moderate relationship of Stress and Depression in undergraduates. Undergraduates with high Social support were less affected by Stress and their Depression level was also low.

Previous studies showd that social support and self-efficacy are positively corelated with each other. Nwoke, Onuigbo and Odo(2017) showed that social support negatively predicted inpatient caregivers' reported stress. Gender significantly predicted stress among the inpatients' caregivers. Findings of the current study were also consistant with these researches. Social support negatively correlated with Psychological distress and positively correlated with Self-efficacy.Wanga, Qub and Xuc(2015)conducted a study on women psychiatrists (N=140) to check the association between Social support and Self-efficacy. They found that female psychiatrists of different ages or with different qualifications experience significant differences in total Social support, Objective support and utilization of support.Objective, Subjective and Utilization of Support have positive associations with Self-efficacy in female psychiatrists. There were significant differences regarding total Social support, Objective support and Subjective support in female psychiatrists with different education level.Conclusively the findings suggested that in Khawajasiras, there is significant positive association between Social support and Self-efficacy. Psychological distress is significantly negatively related with Social support and Self-efficacy. Social support significantly predicted the Psychological distress in Khawajasiras even after controlling the demographic variables. In Khawajasiras, association between Social support and Psychological distress was mediated by Self-efficacy.

Suggestions

- Future research could investigate the factors contributing in Psychological distress among Khawajasiras.
- Government and other Non-Governmental Organizations should rigorously start community awareness campaign and programs to minimize gender related stigma and maximize Social support.
- The Khawajasira associations should work effectively on ground basis to bring them in mainstream.

References

Adelson, S. L. (2012). Practice Parameter on Gay, Lesbian, or Bisexual Sexual Orientation, Gender Nonconformity, and Gender Discordance in Children and Adolescents. *Journal of the American academy of child & adolescent psychiatry, 51*(9), 957–974. doi:10.1016/j.jaac.2012.07.004

Akhtar, M. (2016, Feburary 29). *Transgender in Pakistan.* Retrieved May 05, 2017, from News Pakistan: http://www.newspakistan.tv/transgender-in-pakistan-by-mahwish-akhtar-jinnah-university-for-women/

Akhuwat. (2016). *AKHUWAT Symbolising Compassion and Equity philosophy - programs - progress - 2016.* Lahore: Warq.

Aurat Foundation. (2016). *Silent No More Transgender Community in Pakistan.* Aurat Foundation and Information Services Foundation, Gender Equity Program.

Bariola, E., Lyons, A., Leonard, W., Pitts, M., Badcoc, P., & Couch, M. (2015). Demographic and Psychosocial Factors Associated With Psychological Distress and Resilience Among Transgender Individuals. *American Journal of Public Health, 105*(10). doi:10.2105/AJPH.2015. 302763

Baron, R. M., & Kenny, D. A. (1986). The moderator-mediator variable distinction in social psychological research: Conceptual, strategic and statistical considerations. *Journal of Personality and Social Psychology, 51*, 1173-1182.

Bartlett, N. H., Vasey, P. L., & Bukowski, W. M. (2000). Is Gender Identity Disorder in Children a Mental Disorder? *Sex Roles, 43*(11-12), 753-785. doi:10.1023/A:1011004431889

Bockting, W. O., Miner, M. H., Rebecca, E. S., Hamilton, A., & Coleman, E. (2013). Stigma, Mental Health, and Resilience in an Online Sample of the US Transgender Population. *American Journal of Public Health, 103*(5), 943-951. doi:10.2105/AJPH.2013.301241

Brettell, C. B., & Sagen, C. F. (1997). *Neither man or woman. Gender in cross cultural perspective.* New Jersey: Prentice Hall.

Cochran, S. D., Mays, V. M., & Sullivan, J. G. (2003). Prevalence of mental disorders, psychological distress, and mental health services use among lesbian, gay, and bisexual adults in the United States. *Journal of Consult Clinical Psychology, 71*, 53-61.

Domínguez-Fuentes, J. M., Hombrados-Mendieta, M. I., & GarcÍa-Leiva, P. (2012). Social Support and Life Satisfaction Among Gay Men in Spain. *Journal of Homosexuality, 59*(2), 241–255. doi:10.1080/00918369.2012. 648879

Fiori, K. L., McIlvane, J. M., Brown, E. E., & Antonucci, T. C. (2006). Social relations and depressive symptomatology: Self-efficacy as a mediator. *Aging & Mental Health, 10*(3), 227-239. doi:10.1080/13607860500310 690

International Gay and Lesbian Human Rights Commission. (2008). *Human Rights and Transgender People in Pakistan.* author. Retrieved May 05, 2017, from www.iglhrc.org

Nwoke, M. B., Onuigbo, E. N., & Odo, V. O. (2017). Social support, self-efficacy and gender as predictors of reported stress among inpatient caregivers. *The Social Science Journal, 54*(2), 115-119. doi:10.1016/j.soscij.2016.08.001

Pasquesoone, V. (2014, April 09). *7 Countries Giving Transgender People Fundamental Rights the U.S. Still Won't.* Retrieved March 29, 2017, from The Movement: https://mic.com/articles/87149/7-countries-giving-transgender-people-fundamental-rights-the-u-s-still-won-t#.90gx7zuDM

Sandfort, T., Graaf, R., Bijl, R., & Schnabel, P. (2001). Same-sex sexual behavior and psychiatric disorders: findings from the Netherlands Mental Health Survey and Incidence Study (NEMESIS). *Arch Gen Psychiatry, 58*, 85-91.

Wang, X., Cai, L., Qian, J., & Peng, J. (2014). Social support moderates stress effects on depression. *International Journal of Mental Health Systems, 8*(1), 41. doi:10.1186/1752-4458-8-41

Wanga, C. M., Qub, H. Y., & Xuc, H. M. (2015). Relationship between social support and self-efficacy in women psychiatrists. *Chinese Nursing Research, 2*(4), 103-106. doi:10.1016/j.cnre.2015.10.002

Wright, E. R., & Perry, B. L. (2006). Sexual Identity Distress, Social Support, and the Health of Gay, Lesbian, and Bisexual Youth. *Journal of Homosexuality, 51*(1), 81-110. doi:10.1300/J082v51n01_05

Information Management and Business Review (IMBR)
Vol. 9, No. 6, December 2017 (ISSN 2220-3796)

Differences in Information Technology Systems in Public and Private Sector

Marwah Yusuf, Paulus Tangke, Grace T. Pontoh
Hasanuddin University, Indonesia
gpontoh@yahoo.com

Abstract: This study aims to examine differences in information technology acceptance in the public sector and private sector (private). This is a study of previous research, especially with regard to the Technology Acceptance Model (TAM). Acceptance of technology according to theory can be influenced by several aspects, such as: behavior, satisfaction, benefits, convenience, social as well as security and privacy. Of the various aspects of this most influential generally considered to differences in acceptance of the technology on "every individual" in the public sector and the private sector there are two namely: aspects of behavior and benefits aspects.

Keywords: *Information Technology systems, public sector, private sector*

1. Introduction

The public sector and the private sector are the two sectors of activity within the community. These two sectors have different characteristics in their activities. Public sector activities more on service to the public interest, while the private sector with the activity of providing products and services to meet community needs to take into account the profit from such activities. In other words the public sector is not profit-oriented while the private sector is profit-oriented. Given the different characteristics of the public sector and the private sector, operationally also appears to differ mainly in its services. The private sectorfor profit-oriented (profit maximization) will strive to excel in competition with competitors, Farlan (1983) and Rockart (1998) in Rahadi (2007), on the other hand the public sector non-profit and government-supervised less or even not feel any pressure from the competition and the owner so do not prioritize the delivery of public services. This has an impact on the services of the two sectors that are very much different in quality of service. One of the factors that distinguish the quality of service in the public sector with the private sector is the acceptance of information technology in the activities of both sectors. The private sector or the private sector will be very quick to respond and to follow and implement the information technology system than the public sector because of the demands to be able to compete with its rivals. On the other hand the public sector with its status as a government agency seems less or is slow to respond and follow perkemban gan information technology systems. Less or lambatanya government attention on the development and acceptance of technology may be caused by cost factors, and the ability of Human Resources (HR) including officials at each agency may be less understanding of information technology systems so less interested in the acceptance of new technology. Rahadi (2007) explains that one of the factors that influence the different characteristics of IT users is the aspect of behavior. Behavior will beinfluenced by the user's perception of the IT theoretically described by the experts of IT as a user and its influence on the use of computers (Davis et al., 1989). The aspect of user's keprilakuan (user) also influences perception and attitude in receiving IT usage. Behavior can be demonstrated by the government in adopting the immature state of IT in improving services to the community as well as promoting transparency and accountability (Rahadi, 2007). This literature study wanted to examine and determine the factors that influence differences in acceptance of information technology systems in the public sector and the private sector based literature-literature from earlier studies.

2. Literature Review

The development of information technology (IT) is currently very very rapid. This provides many benefits and services on various aspects of activities both in the private sector and the public sector.But the question for us today is why services in the private sector are generally relatively faster and better than in the public sector? Researchers have been conducting research to study the process of integration of information systems and technology since the 1970s and several models have been developed to help analyze and understand the factors that affect the acceptance of the use of technology - especially computer technology, including those recorded in some literature and reference results research in information technology, such as

the *Theory of Reasoned Action* (TRA) by Icek Ajzen and Martin Fishbein (1980), *Theory of Planned Behavior* (TPB) by Ajzen, (1988) and the *technology Acceptance Model* (TAM) by Fred D. Davis (1986). Technolog y Acceptance Model (TAM)) is one model the use of information technology systems that are considered very influential and is commonly used to describe the individual acceptance of the use of information technology systems for this model is considered to be simpler and easier to implement, Wijayanti (2009). TAM is the result of the development of T heory of Reasoned Action (TRA).TAM adds two major constructs into the model TRA, the user's perception of the benefits (perceived usefulness) and the user's perception of the ease (Jogiyanto, 2008). The user's perception of the benefits (perceived usefulness) is the perception in which a person believes that using a particular system can improve its performance, while the user's perception of the ease is the perception in which a person believes that using the system will not need any effort (free of effort), the user's perception of the ease too effect on the user's perception of the benefits (perceived usefulness)which can be interpreted that if a person feels easy in use a system, the system will be useful to them (Wijayanti, 2009).

3. Discussion

From some literature and reference previous research pointed out that there are several factors that affect individuals in receipt of technology, among others, aspects of behavior, satisfaction aspects, aspects of convenience and benefits and aspects of security and privacy aspects.

Aspect of Behavior: Man as a psychological system users have a behavior (behavior) that certain attached to him, so that aspect keprilakuan in the human context as users of information technology *(brain-ware* - IT) becomes important as a deciding factor in everyone who runs IT. Behavioral considerations need to be given special attention in the context of the acceptance of information technology (IT). Thompson et al. (1991) in Rahadi (2007) describes the attitude factor *(attitude)* as one of the aspects that influence individual behavior in which a person's attitude consisting of components of cognition *(cognitive),* affective *(affective)* And components related to the behavior *(behavioral components).*

Aspects of Satisfaction: Individual and collective acceptance of the use of information technology systems can be explained by variations in the use of a system as it is believed that the use of a system based on information technology (IT) can develop individual performance or the performance of the organization (Iqbaria, 1994; Luthans, 1995 and Nelson, 1996 in Rahadi, 2007). Aspects of user satisfaction has been identified on several other studies as one of the factors acceptance of IT, which is generally known that the acceptance of information technology (IT) can be seen from the use of the system and the frequency of the use of IT and some are viewed from the aspect of user satisfaction (DeLone, 1981; Soh et al., 1992; Montazemi, 1988; Raymond, 1985,1990; Iqbaria et al., 1997 in Rahadi, 2007).

Aspects of Benefits: As we know that **s** ne of the k onstr uk on the *Technology Acceptance Model* (TAM) is the perception of the usefulness *(perceived usefulness)* which is defined as the extent to which a person believes that the use of a technology will improve the performance of his work (*"as the extent to the which a person Believes that using a technology will Enhance his or her performance "),* (Jogiyanto, 2008). This definition is similar to the definition put forward by Davis et al. (1989) and Adam et al. (1992) in Rahadi (2007) that efficacy *(usefulness)* is a degree to which a person believes that the use of a specific technology subjects will be able to improve the work performance of the person. Thus from this definition can be interpreted that the expediency of the use of information technology (IT) can improve performance, achievements working people who use it. Utilization of information technology is a benefit expected by IT users in performing tasks and work. Measurement of usefulness can be done based on the frequency of use and diversity / diversity of applications run. Chin and Todd (1995) in Rahadi (2007) provide several dimensions of the usefulness of information technology and classify it in two categories:

- Utilization with one factor estimate, including dimensions:
  a. make the job easier *(makes job Easier)*
  b. useful *(useful)*
  c. add productivity *(increase of productivity)*
  d. enhance the effectiveness *(enchance efectiveness)*
  e. develop job performance *(improve job performance)*

- Utilization with two factor estimate, consisting of:
- Utilization includes dimensions:
  a. make the job easier *(makes job Easier)*
  b. useful *(useful)*
  c. increases productivity *(increase of productivity)*
- Effectiveness includes dimensions:
  d. enhance the effectiveness *(enchance efectiveness)*
  e. developing the job performance *(improve job performance)*

Aspect of Convenience: Aspects of ease is a construct of the second additional on TAM which is defined as the extent to which a person believes that using a technology would be free of effort (*"is the extent to the which a person Believes that using a technology will be free of effort"),* (Jogiyanto, 2007). Aspects of expediency by Davis et al. (1989) in Zahid et al. (2010) defined as so far where someone believe that use system certain will improve performance job. People adapt with technology certain because it considers that use technology and System information will improve performance them. The more frequently used systems show that the system is better known, easier to operate and easier to use by its users.

Social Aspects: The social aspect or social norms may affect the person's behavior in which a person will be affected by the news received from others and reflect on what people think should be done for, Triandis (1971) in Jogiyanto, (2008). Social factors as the individual's internalization of subjective reference group culture, and specific interpersonal agreements that have been made by the individual with others in certain social situations. IT in the literature to date, the role of subjective norms as determinants of use T I somewhat unclear. Good Davis et al. (1989) and Mathieson (1991) found no significant relationship between subjective norms and intentions. However, research in organizational settings have found subjective norms become important determinants of intention or the use of T I (Hartwick and Barki, 1994).

Security and Privacy Aspects: Aspects of security and privacy is one factor consideration of acceptance of information technology system. From a security standpoint technology users will feel more secure and also from aspects of user privacy privacinya also feel more secure. Security and privacy have effect directly and significant to trust consumers, users and the public. When people have confidence and guarantee about privacy and security then of course that will push them to use information technology which would maintain security and privacy. Problem security is wrong one the most important obstacle for reception technology information system (Laforet and Li, 2005). Manzano et al. (2008) states that the perceived risk composed of security, privacy, performance and factors social, and have a strong bearing in adopting information technology systems.

Differences in Reception of Technology Information Systems in the Public Sector

Private Sector: Based on the description of some of the aspects that affect the acceptance of information technology systems above it was explained that the main reason for the private sector is superior in the acceptance of information technology systems is a factor of competition, and the attempt to reduce operating costs as efficiently as possible to encourage the private sector to take advantage of the system informarsi technology in run its activities. Increasing mobility rates in the community have led to private or private sector service providers having to make innovations in their products or services with the acceptance of technology as part of innovation. On the other hand the public sector with its status as a government agency is strongly bound by the regulation of the central government. Besides the public sector there is no pressure of competition with other parties as competitors so they are not so challenged by innovation to improve its service to the community. And more importantly, individual performance appraisals take precedence over the private sector rather than the public sector so that the Human Resources (HR) in the public sector appears to be less rapid in responding to the development and acceptance of technology. In other words, human resources in the private sector will make every effort to demonstrate achievement through performance for career improvement or at least to maintain the "fate" of his; different from the human resources in the public sector who might feel "safer position" because it is protected by the rules and performance assessment is less noticed by the boss or the office.

4. Conclusion

Technology has become a major driver who bring change and make things easier in a timely manner. Technological breakthroughs have brought huge changes especially from the last century. But technological breakthroughs indicate acceptance of different individuals in the private sector or private individuals in the public sector. *Technology Acceptance Model* (TAM) is specifically constructed to determine the factors that influence a person to accept the technology and information systems. TAM has me ngidentifikasi two key factors, namely the perceived ease of use and perceived usefulness as a major factor to one's intention to receive and use information technology (IT). Variation in information technology in the private sector with the public sector is the motivation of individuals higher in the private sector, emphasis on more stringent performance measures on private or private sectors, and more flexible but less "secure" private sector HR status than in the public sector. In other words, the difference in the acceptance of information technology for each individual in the private and public sectors in general lies in aspects of behavior and benefits aspects.

References

Davis, F. D., Bagozzi, R. P. & Warshaw, P. R. (1989). User acceptance of computer technology: a comparison of two theoretical models. *Management Science*, 35(8), 982-1003.

Hartwick, J. & Barki, H. (1994). Explaining the role user participation in information system use. *Management Science*, 40, 440-465.

Jogiyanto. (2008). Sistem Informasi Keperilakuan, EdisiRevisi CV. Andi Offset.

Laforet, S. & Li, X. (2005). Consumers' attitudes towards online and Mobilebanking in China. *International Journal of Bank Marketing*, 23(5), 362-380.

Manzano, J. A., Navarre, C. L., Mafe, C. R. & Sanz-Blas, S. (2009). Key drivers of Internet banking services use. *Online Information Review*, 33(4), 672-695.

Mathieson, K. (1991). Predicting intentions: Comparing the technology acceptance model with the theory of planned behavior. *Information Systems Research*, 2, 173- 191.

Rahadi, D. R. (2007). Peranan Teknologi Informasi dalam Peningkatan Pelayanan di Sektor Publik, Seminar Nasional Teknologi (SNT, 2007), Yogyakarta.

Wijayanti, R. (2009). Analisis Technology Acceptance Model (TAM) Terhadap Faktor-Yang Mempengaruhi Penerimaan Nasabah Terhadap Layanan Internet Banking; Jurusan Akuntansi, Fakultas Ekonomi – Universitas Gunadarma, Depok – Jakarta.

Yousafzai, S. Y., Gordon, R., Oxall, F. & John, P. (2010). Explaining Internet Banking Behavior: Theory of Reasoned Action,Theory of Planned Behavior, or Technology Acceptance Model? *Journalof Applied Social Psychology*, 40(5), 1172-1202.

Zahid, N., Mujtaba, A. & Riaz, A. (2010). Consumer Acceptance of On line Banking. *European Journal of Economics, Finance and Administrative Sciences*, 27(3).