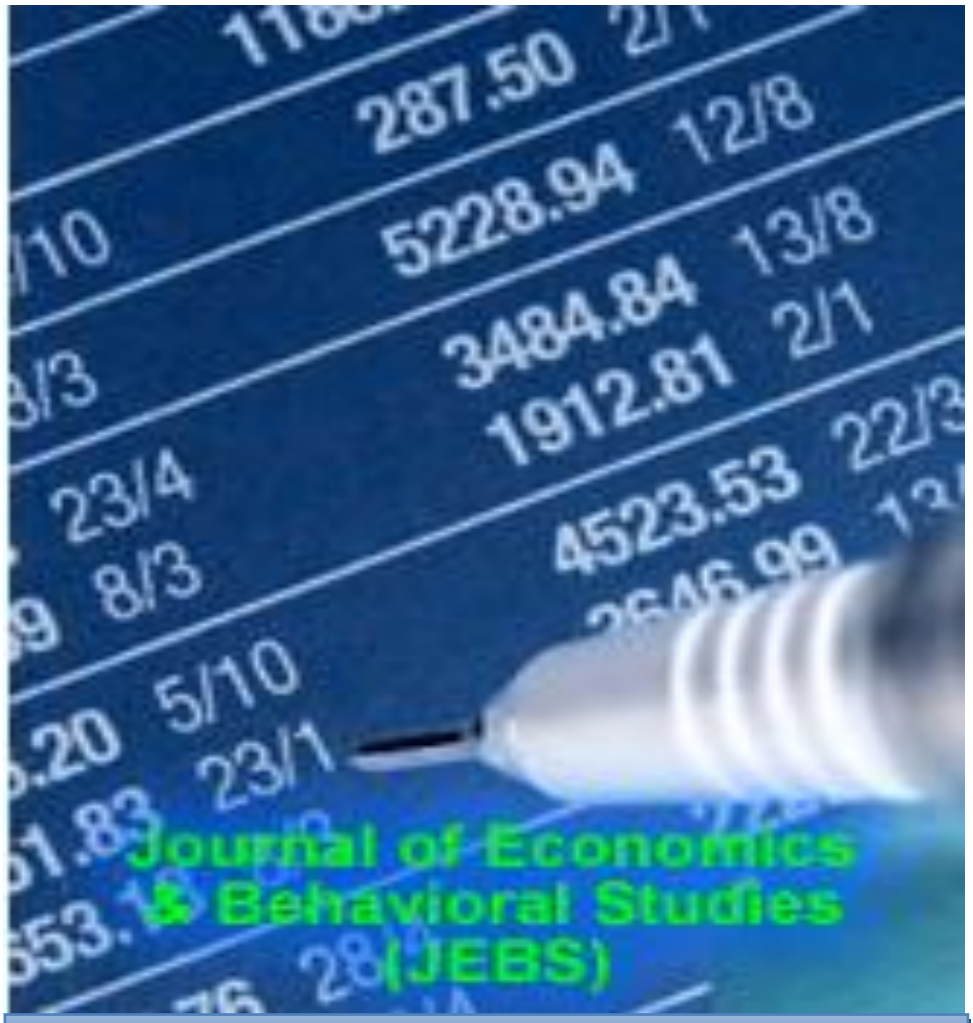

Vol. 14 No. 2 ISSN 2220-6140

Editorial

Journal of Economics and Behavioral Studies (JEBS) provides distinct avenue for quality research in the ever-changing fields of economics & behavioral studies and related disciplines. Research work submitted for publication consideration should not merely limited to conceptualization of economics and behavioral developments but comprise interdisciplinary and multi-facet approaches to economics and behavioral theories and practices as well as general transformations in the fields. Scope of the JEBS includes: subjects of managerial economics, financial economics, development economics, finance, economics, financial psychology, strategic management, organizational behavior, human behavior, marketing, human resource management and behavioral finance. Author(s) should declare that work submitted to the journal is original, not under consideration for publication by another journal and that all listed authors approve its submission to JEBS. Author (s) can submit: Research Paper, Conceptual Paper, Case Studies and Book Review. Journal received research submission related to all aspects of major themes and tracks. All submitted papers were first assessed by the editorial team for relevance and originality of the work and blindly peer-reviewed by the external reviewers depending on the subject matter of the paper. After the rigorous peer-review process, the submitted papers were selected based on originality, significance, and clarity of the purpose. The current issue of JEBS comprises papers of scholars from South Africa, Nigeria, Pakistan, KSA and Malaysia. The Impact of Social Media on Social Cohesion, Audit Characteristics and Financial Reporting Timeliness of Non-Financial Institution, Market Potential of Freshwater Fish Farmers, The Impact of Workforce Diversity on Organizational Performance and Green Product and Process Innovation, Corporate Environmental Ethics and Competitive Advantages among Manufacturing Firms were some of the major practices and concepts examined in these studies. The current issue will therefore be a unique offer where scholars will be able to appreciate the latest results in their field of expertise and to acquire additional knowledge in other relevant fields.

Editor In Chief

Prof Dr Ijaz

Editorial Board

- Mehmed Muric PhD, Global Network for Socioeconomic Research & Development, Serbia
- Ravinder Rena PhD, Monarch University, Switzerland
- Apostu Iulian PhD, University of Bucharest, Romania
- Sisira R N Colombage PhD, Monash University, Australia
- Chux Gervase Iwu PhD, Cape Peninsula University of Technology, South Africa
- Hai-Chin YU PhD, Chung Yuan University, Chungli, Taiwan
- Ankit Katrodia PhD, North West University, Mmabatho, South Africa
- Elena Garcia Ruiz PhD, Universidad de Cantabria, Spain
- Fuhmei Wang PhD, National Cheng Kung University, Taiwan
- Saqib Muneer PhD, University of Hail, Saudi Arabia
- Johan de Jager PhD, Tshwane University of Technology, South Africa
- Mamta B Chowdhury PhD, University of Western Sydney, Australia

TABLE OF CONTENTS

Description	Pages
Title	I
Editorial	II
Editorial Board	III
Table of Contents	IV
Papers	V
The Impact of Social Media on Social Cohesion in South Africa Tawanda Matema, Paul Kariuki	1
Audit Characteristics and Financial Reporting Timeliness of Nigerian Listed Non-Financial Institution Eghosa Godwin Inneh, Isaiah Omotayo FAKUNLE, Romoke Rafiat BUSARI, Ibrahim Gbenga OLATUJI	13
Market Potential of Freshwater Fish Farmers in Limpopo Province Master Maebane, Ntise Manchidi, Germinah Chiloane-Phetla	26
The Impact of Workforce Diversity on Organizational Performance: A Review Simon Rafaqat, Sahil Rafaqat, Saoul Rafaqat & Dawood Rafaqat	39
Green Product and Process Innovation, Corporate Environmental Ethics and Competitive Advantages among Manufacturing Firms in the Kingdom of Saudi Arabia Tai Abdulrahman Alshammari, Khalid Mhasan Alshammary, Fahad Maiyah Alshammari	51

PAPERS

Journal of Economics and Behavioral Studies (JEBS)
Vol. 14, No. 2, June 2022 (ISSN 2220-6140)

The Impact of Social Media on Social Cohesion in South Africa

Tawanda Matema[1] & Paul Kariuki[2]
[1]University of the Witwatersrand, Johannesburg, South Africa
[2]University of KwaZulu Natal, Durban, South Africa
tawanda.matema@kas.de, paulk@ddp.org.za

Abstract: Social cohesion is an important policy issue with social, political and economic consequences in South Africa. Given the country's diverse population comprised of different races, ethnicities and migrants from around the world, its history of violence and the persistent incidences of xenophobia, social cohesion has become a prominent issue. The study foregoes discussing the challenges of achieving social cohesion to examine the nexus between social media and social cohesion promotion. Since lockdown was introduced in March 2020, social media has become a means for daily communication, bridging racial, ethnic, class and geographical boundaries. Against this background, this study explored the impact of social media on social cohesion in South Africa? The main objective was to examine the role played by social media in fostering social cohesion. A systematic review of relevant academic literature and research reports on social media and social cohesion was adopted in gathering data. By examining the social media social cohesion nexus, an illustration of social media as an essential determinant of social cohesion can be delineated. Teasing out these aspects is vital in enriching the current literature on understanding social cohesion. The study found that social media has become an essential platform for nation-building, potentially bridging racial, ethnic, cultural, and geographical gaps in South African society. However, due to the threats of misinformation and insensitive use, social media can hamstring social cohesion and cause instability. The study recommends that social media be used appropriately and sensitively in strengthening interpersonal relationships that transcend race, culture, ethnicity, nationality, and religion.

Keywords: *Social-Media, Social Cohesion, South Africa, Public Sphere, Solidarity.*

1. Introduction

The young democracy of South Africa has not yet emerged as the cohesive society (Kiguwa & Langa, 2015; Patel, 2021b) envisioned at independence over two and a half decades ago. Persistent social movements, routine xenophobic violence, continuous service delivery protests and growing unemployment, widening racial inequalities and pervasive race wars on social media, among other things, illustrate the cleavages that characterize the country's political landscape and indicate the need for cohesion. Given the complex diversity of the South African population, comprised of African, Coloured, Indian and White races; over 11 ethnic groups and immigrants from the continent and beyond (Statistics South Africa, 2019, 2021), social cohesion has become a critical policy agenda. The conceptual underpinnings of social cohesion suggest that a "glue" must bind society together (Jakubowicz, 2007; Burns: et al., 2018; Njozela, Shaw & Burns, 2021). This glue is akin to a shared sense of identity, ideas and values to resolve distinctions among individuals within groups and commonality in goals to ensure cooperation and unity between different groups. Jakubowicz utilizes the phrase "the building and demolition of social capital" to describe processes that encourage people to unite and divide respectively (Jakubowicz, 2007). At the same time, he asserts that social capital includes "bonding processes that build links within groups," and "bridging processes that build links between groups."

This study conceptualizes social cohesion in the South African context in fuller detail in the literature review. Nevertheless, the study broadly defines the concept as the process of forming a collective and, simultaneously, the level of interrelatedness in a society from the development perspective. Social cohesion is idealized as a solution to many social ills; therefore, it is measured by the levels of the connectedness of populations in society, inequality and poverty *inter alia*. Taking note of the aspects of interrelatedness and connectedness, the mass media, in general, have always been utilized to build or demolish social capital over the years. In particular, social media have evolved to dominate the construction and communication of culture and meaning in the public sphere of society on a global scale. The study conceptualizes social media as the means of transmission over the internet through public applications. Applications such as WhatsApp, Facebook, Facebook Messenger and Instagram provided by Meta; Twitter, YouTube and LinkedIn define the purview of social media under this study. The COVID-19 pandemic in early 2020 and the subsequent policy

response of national lockdowns catapulted the uptake of social media in the public sphere of day-to-day life, prompting interest in the social media and social cohesion nexus.

This research seeks to answer the question, what is the impact of social media on social cohesion in South Africa? The study's main objectives are to delineate the role(s) played by social media and analyze if social media has enhanced or diminished social cohesion in South Africa. By examining the nexus between social media and social cohesion in South Africa, an illustration of social media as both a key determinant and essential facilitator of social cohesion in contemporary South Africa can be delineated. Teasing out these aspects can enrich the current literature on understanding social cohesion. It also opens up avenues and debates around achieving greater cohesiveness in South Africa and, by extension Africa.

2. Literature Review

Social Cohesion in the South African Context: Achieving social cohesion is one of the more elusive policy challenges that the post-apartheid South African state faces (Kiguwa & Langa, 2015; Burns: et al., 2018; Njozela, Shaw & Burns, 2021; Patel, 2021a). Racial inequalities, the widening gap between the rich and the poor and the diversity of the population are some of the factors that feed into this challenge. Social cohesion is a longstanding concept, yet it appeared fairly recently during the last two decades of South Africa's democracy (Palmary, 2015). It can be traced to the 2004 Social Cohesion and Social Justice in South Africa report on the dangers of racism, class and social inequality to unify the country (Dexter, 2004). The concept also featured in political speeches like former President Zuma's 2009 address that reiterated the post-apartheid goal of building a unified democratic South Africa and the 2011 National Planning Commission's diagnostic document on social cohesion (Department of Arts and Culture South Africa, 2012: 2). The term has been intricately tied to the concepts of 'Ubuntu' and the 'rainbow nation' ever since. However, the question remains, what is social cohesion in the South African context? Although social cohesion is essential, there is little consensus on what the term entails (Chan, To & Chan, 2006; Schiefer & van der Noll, 2017). Emile Durkheim conceptualized social cohesion as characterized by the absence of social conflict and the vital force that unites society (Fonseca, Lukosch & Brazier, 2019).

The concept has received much scholarly conflicting attention ever since (Maxwell, 1996; Jenson et al., 1998; Chan, To & Chan, 2006 and OECD, 2011), among others. The lack of definitional consensus can be attributed to the politicization of social cohesion and conceptualization from distinct policy domains. For instance, the focus of social cohesion for the World Bank was on economic development. For the European Union, social cohesion was understood in relation to economic instability *inter alia* (Schiefer & van der Noll, 2017). According to the Human Sciences Research Council (HSRC), "… the OECD's vision for social cohesion emphasizes the right to economic well-being, the Council of Europe stresses democratic citizenship, and the EU, solidarity" (Jeannotte, 2000). Distinct conceptualizations of social cohesion are also notable on the African continent. Notwithstanding the lack of definitional consensus, the term has been utilized by policymakers, academics, thinktanks and scientists in relation to development and in the formulation of policies aimed at addressing challenges in society (Schiefer & van der Noll, 2017). Consequently, social cohesion has been vaguely constructed as an all-encompassing concept for most if not all societal challenges. For instance, while noting the complexities of defining social cohesion, the HSRC describe the concept as, "… the extent to which a society is coherent, united and functional, providing an environment within which its citizens can flourish" (Dexter, 2004). The best way of conceptualising social cohesion has been to characterise an incohesive society.

Which has often been marked by conflict, social unrest, violence, social inequality and marginalization of minority portions of society (David et al., 2018; Meiring, Kannemeyer & Potgieter, 2018). The absence of social cohesion can be associated with authoritarian regimes mainly because practices of coercion and social exclusion characterize them. Therefore, social cohesion is conceptualized as intricately tied with democracy, social inclusion, social justice, cooperation, economic growth, unity and open access, among others. There are five measures of social cohesion: affiliation/isolation, which forms identity or shared values; insertion/exclusion, which is the availability of access to economic opportunities; participation/passivity in public affairs; acceptance/rejection; and legitimacy/illegitimacy (Jenson et al., 1998). These characterizations show the complexity of defining social cohesion. To delineate the meaning of social cohesion within this

article, we employ three definitions that speak to the context of South Africa. First, "The term social cohesion seems to group all pressing social issues – racism, income inequality, civic responsibility, etc. – into one overarching question: how can South African citizens be brought to think and act in solidarity, in the interests of everyone and the nation as a whole?" (Struwig et al., 2013, 401). The above description speaks to the inclusive nature of social cohesion as an umbrella term for resolving most social ills. The element of solidarity implies that social cohesion depends upon the cooperation of members of society.

Second, "A cohesive society works towards the well-being of all of its members, minimizing disparities and avoiding marginalization. It entails three major dimensions: fostering cohesion by building networks of relationships, trust and identity between different groups; fighting discrimination, exclusion and excessive inequalities; and enabling upward social mobility" (OECD, 2011, 52-3). And third, "A process of building shared values and communities of interpretation, reducing disparities in wealth and income, and generally enabling people to have a sense that they are engaged in a common enterprise, facing shared challenges, and that they are members of the same community" (Maxwell, 1996). The last two definitions encapsulate the essence of solidarity and cooperation of members of society in actively addressing the challenges they face for the benefit and equality of all. They also speak to developing a social identity where community members feel valued, and their participation is required. The above definitions help give the scope of the envisioned social cohesion in South Africa. Similar to other nations, the post-apartheid democratic state of South Africa has experienced increased threats to social cohesion since independence in 1994. To understand the importance of attaining social cohesion in the country, it is important to look at the diversity of the South African social, political and economic landscape aptly dubbed the rainbow nation.

Understanding the Diversity of the South African Social Landscape: South Africa is a diverse country with a population that is comprised of African, Coloured, Indian and White races; over 11 ethnic groups and immigrants from the continent and the world, making social cohesion a vital policy agenda (Statistics South Africa, 2019, 2021). The South African constitution reflects the diversity of the country and also calls for equality for all people that live in the country as it declares, "We the people of South Africa believe that South Africa belongs to everyone who lives in it, united in our diversity" (Constitution of the Republic of South Africa, 1996 | South African Government, no date) indicating the importance of a socially cohesive post-apartheid South African democratic nation. However, Palmary asserts that on a closer inspection of the constitution, social cohesion has been constructed around citizenship. As a result, it becomes a source of social fragmentation since the policy is exclusionary of groups that are non-citizens (Palmary, 2015). For instance, Chapter Nine of the constitution speaks of inclusivity between the state and its citizens and not necessarily groups that are non-citizens such as migrants.

Palmary notes that this is an example of negative social cohesion since encouraging social cohesion amongst citizens ignores and excludes the existence of immigration. A consequence of this has been the sporadic outbreaks of xenophobia that have plagued the post-apartheid democracy of South Africa, but it does not end there. Incidents such as basic services delivery protests, increasing youth unemployment, xenophobic attacks on African migrants and anti-migrant protests, spatial exclusion, institutionalized racism, and sexism, among others, point out the social divisions in the rainbow nation (Struwig et al., 2013). The population has been fragmented on the lines of race, unequal social classes, ethnicity, language, the spatial division between the urban and rural, migration status and religion, to name a few. The Institute for Justice and Reconciliation (IJR) conducted a national public opinion survey, the South African Reconciliation Barometer (SARB), in 2019, which showed that over 70 percent of South Africans pointed to the apartheid regime as the source and cause of poverty in the country today (IJR, 2019).

The apartheid system segregated and discriminated against the majority South African population that was non-white and comprised of black and colored groups. All non-whites were excluded from meaningful employment, which was controlled by the white minority population. Social interaction or contact between whites and non-whites was forbidden, resulting in unequal educational standards and even denied the participation of non-whites in the government unless they were represented by a white South African, to name a few. By the time independence came in 1994, most of the population was economically, politically and socially disadvantaged, while the minority controlled and owned most of the country. According to the (IJR, 2017), South Africans are economically insecure and disadvantaged, which is one of the major causes of

fragmentation within the country. Considering the aforementioned state of social cohesion in South Africa, this research seeks to understand the impact social media has had on social cohesion in the country.

3. Methodology

The study used a documentary research methodology to review the literature and social media databases. A systematic literature review was adopted to gather data on relevant academic articles, research reports, newspapers and online blogs on social media and social cohesion in South Africa. The study examined the We Are Social and Hootsuite digital reports from 2015 to 2021, databases such as Statistics South Africa (Stats SA), Statista and Hello Yes Marketing, among others, to determine social media usage trends in South Africa during the COVID19 crisis from 2020 to midyear 2021. The study also analyzed data on critical aspects of social cohesion, such as the level of inequality and cooperation among citizens in the country and the use of social media in bringing South Africans together during the time mentioned above. The study also considered the challenges to building a socially cohesive society associated with using social media in the country.

4. Results and Discussion

The modern public domain is influenced by media more generally and social media more specifically. This is true for the South African public domain, given the number of social media users. Based on the We Are Social & Hootsuite's Most Used Social Media Platforms in South Africa Report in January 2020, South African internet users between the age of 16 to 64 reported using the following social media platforms: WhatsApp being the most used platform with 89 percent, followed by YouTube with 87 percent, Facebook 83 percent, FB Messenger 61 percent, Instagram 61 percent, Twitter 44 percent, Pinterest 42 percent and LinkedIn with 41 percent to name a few (Kemp, 2020). The implications social media has on social cohesion are therefore manifold. Ideally, the roles of social media are to provide both local and international platforms for the production, dissemination, negotiation and consumption of societal meaning (Jakubowicz, 2007). According to Curran, Morley and Walkerdine (1996), since the media are, in essence, tools of mass communication in any society, media is neutral, meaning it can be utilized to either promote social cohesion or fuel social conflict. We consider some of the implications of social media on social cohesion below.

The Influence of Social Media on South Africa's Public Sphere: For social media to significantly impact social cohesion in South Africa, utilization of the former by a considerable number of the country's population must be established. An examination of the internet and social media activity against the total population in South Africa as of 2021 shows that 64% of the population were active internet users, and about 41.9% were active social media users (Kemp, 2021). Therefore, the utilization of social media has a strong bearing on social cohesion in the country. Below are Figure 1 and Figure 2 showing the utilization of the internet and social media against the total population and the average daily use of the internet and social media from 2015 to 2021, respectively. The figures are a conflation of the Digital Reports from We Are Social & Hootsuite from 2015 to 2021 to establish if a reasonable section of the population is utilizing social media to have any real impact on social cohesion.

Figure 1: Internet and Social Media Users from 2015 - 2021

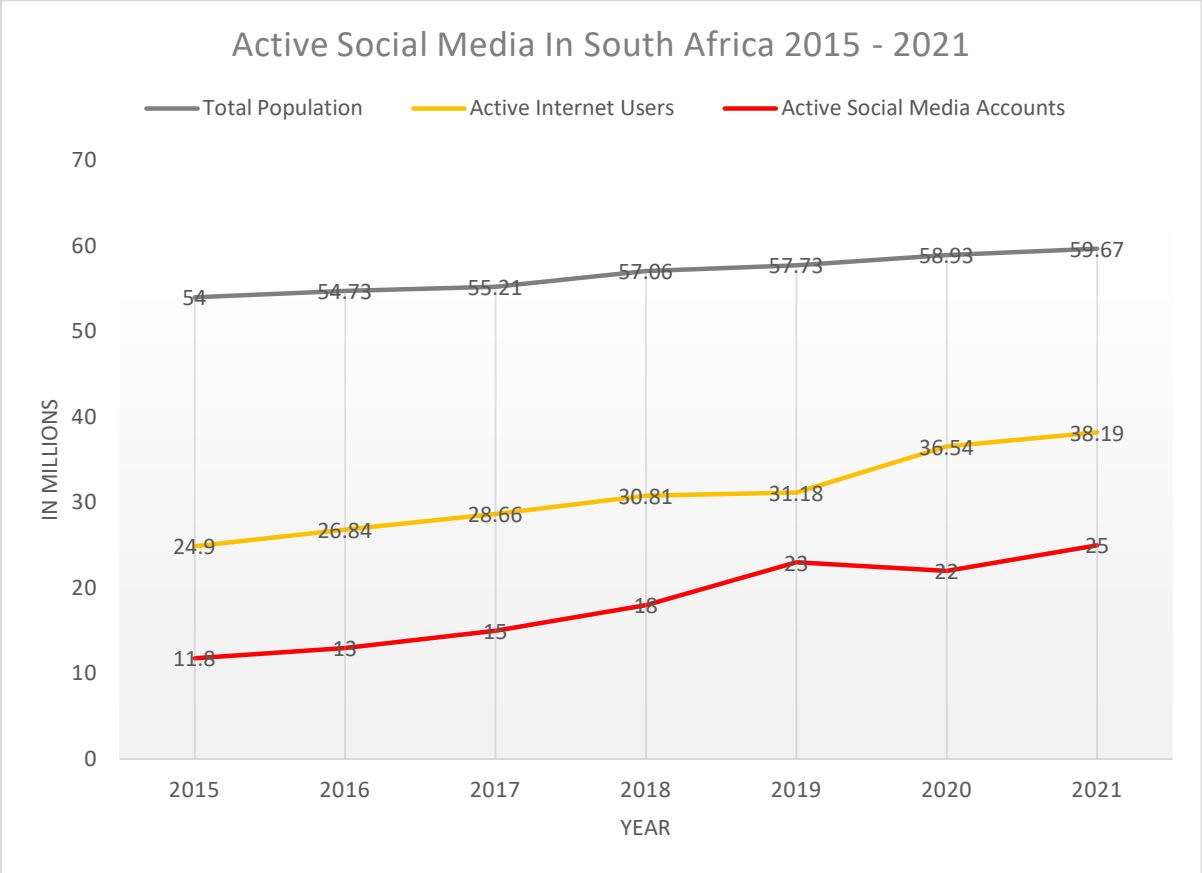

The data shows a steady increase in the number of people using social media from 11.6 million in 2015 to 25 million in 2021. The SA Social Media Landscape Report (2021) also concurs that there are around 38 million internet users and approximately 25 million social media users in the country. This increase illustrates the growing influence of social media on the public sphere, where social cohesion occurs on one hand and the migration of people from the physical to the virtual public sphere on the other hand. Comparing the number of people using social media amounting to around 25 million and the total population of close to 60 million establishes the implications of social media on social cohesion to be worth considering and potentially significant since close to half of the population engages on social media. The data further supports this observation because it shows an increase in social media utilization. Additionally, Figure 2 below illustrates that the daily average time spent on social media rose from an average of 2.6 from 2015 to 2019 to 3.1 in 2020 and 3.32 in 2021.

Figure 2: Average Daily Time Spent on the Internet and Social Media from 2015 - 2021

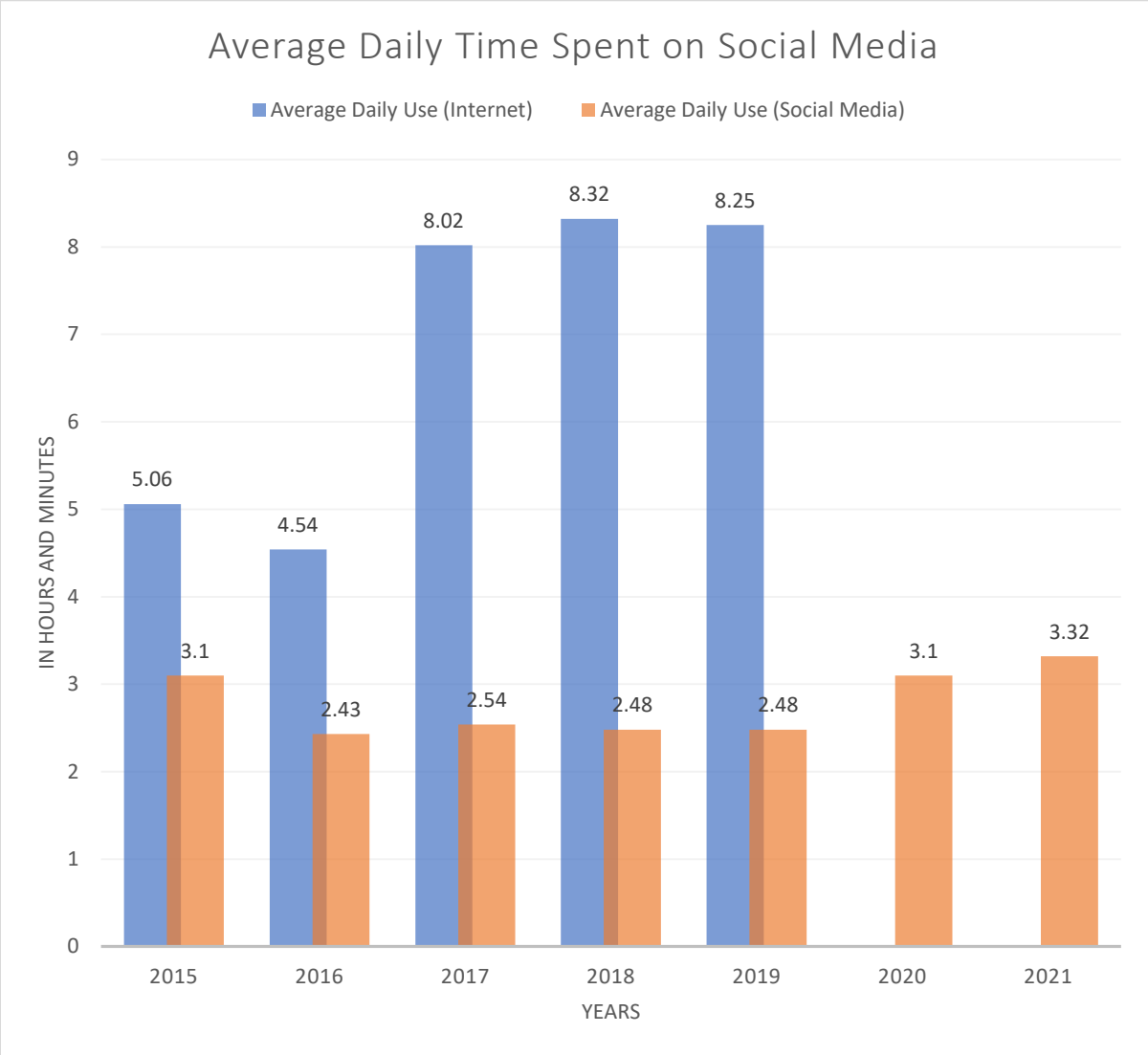

The Purpose for Social Media Use in Relation to Social Cohesion and its Implications: More significant than the number of people using social media is to interrogate how social media is used and for what purpose. While the aforementioned increase in social media users and usage is not an explicit indication of social cohesion in the broad sense, it does illustrate that the internet and social media are expanding as a virtual public sphere. A public sphere is open to everyone, and the purpose of a public sphere is critical debate (Habermas, 1989). The public sphere is a neutral platform for political communication – where the civil society and the state, the government and governed engage (Habermas, 1989; Gillwald, 1993). This engagement, if carried out successfully produces a cohesive society. Determining the purpose of social media usage is challenging however, examining which social media platforms are being utilized may offer insights on whether social cohesion is being advanced. Figure 3 below tries to capture this.

Figure 3: Percentage of the Population Using Different Social-Media Platforms from 2015 - 2021

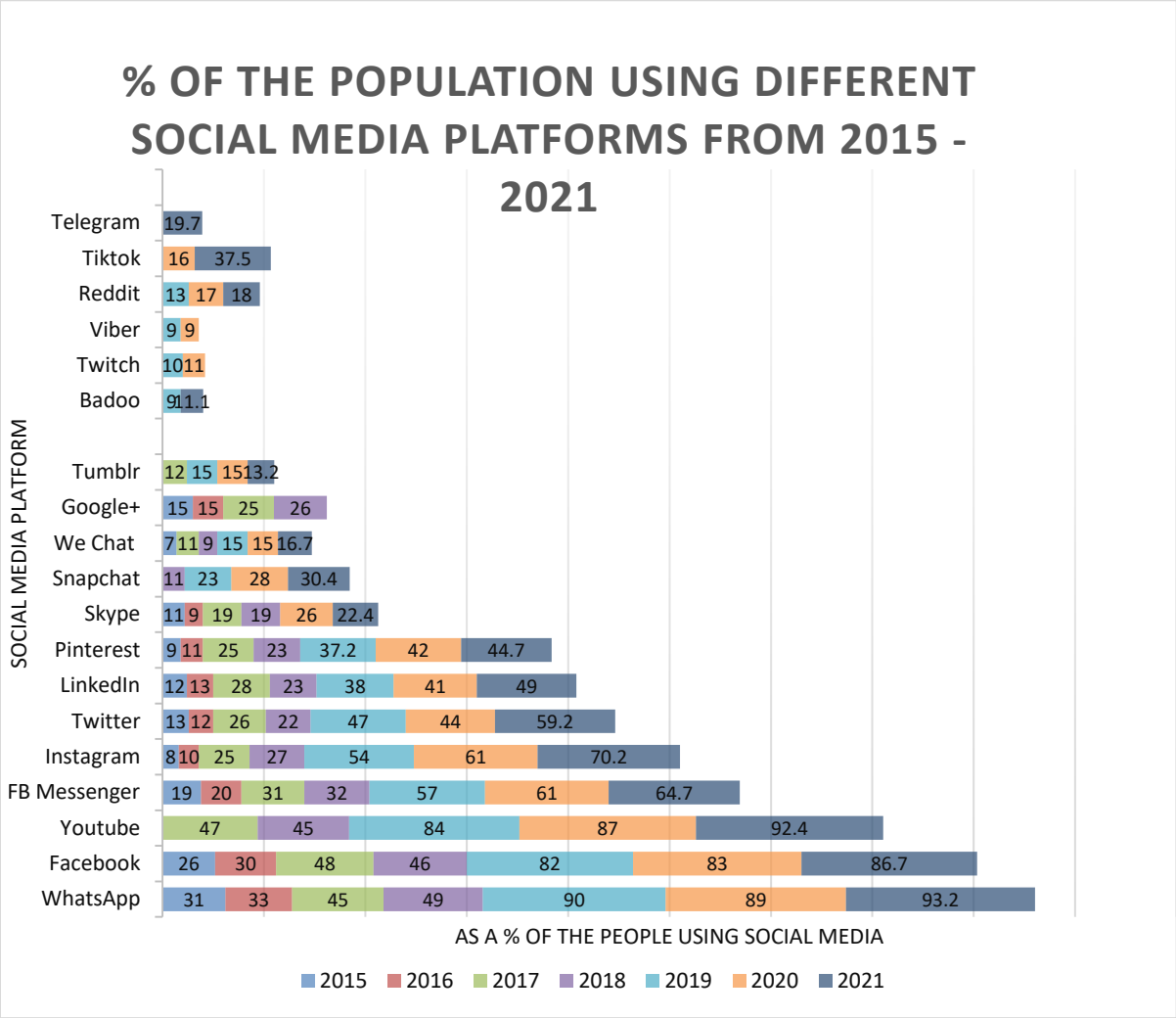

The data shows that since 2015 several social media platforms have been utilized from those that are entertainment-oriented like Snapchat, TikTok, Instagram and Badoo, to business-oriented platforms like telegram, LinkedIn, Google+ and Skype as well as instant messaging platforms which are engagement-oriented like Twitter, Facebook, Messenger, YouTube and WhatsApp. More significant to this discussion is that the data shows that first there has been more utilization of instant messaging social media platforms which are engagement oriented as opposed to entertainment platforms. Second, there has been a significant increase in the number of people utilizing instant messaging platforms. These observations suggest that social media has the potential to enhance social cohesion since these platforms allow for engagement on a plethora of themes from politics, the economy, society, sports and businesses to name a few. These platforms are also characterized by interest aggregation since people with similar interests and views can form communities that transcend race, culture, ethnicity, nationality, and religion. These engagements reflect the aspect of cooperation which is a part of social cohesion.

Inequality: Intra-Group Cohesion as Opposed to Inter-Group Cohesion: The COVID-19 pandemic distorted the nature of the public domain – the national lockdowns in response to the pandemic resulted in the migration from the physical public domain to a virtual and digital one (Patel, 2021b; The SA Social Media Landscape Report, 2021; Businesstech, 2021). While digital technologies had already been transforming social interactions, they also enhanced the inequality that existed between social groups through exposure to the digital divide (Marlowe, Bartley & Collins, 2017). While a shared vision of 'building back better' characterized the global scene, in South Africa, societal cleavages further widened as the social class divide

between rich and poor, the racial division between black and white, and anti-African migrant sentiment in the country deepened. Despite this, social cohesion was promoted as social mobilization became more localized and more accessible.

According to the SA Social Media Landscape Report (2021), an increase of 59% of respondents asserted that social media is an effective mode of public interactions and relations. However, this interaction tended to be more intra-group rather than intergroup meaning social cohesion occurred on a smaller scale in most cases. An investigation into the use of social media in South Africa in 2019 found that there are preferences in terms of social media type and usage (Budree, Fietkiewicz & Lins, 2019) which has an implication for cohesion. A good example of this is Black Twitter, which is Twitter for black South Africans. Inclusion into or exclusion from the group is based on the 'blackness' of the person and the implications thereof is that while the identity of blacks is being formed and there is social cohesion within the group, simultaneously the group is excluding every other group that is non-black therefore impeding social cohesion on a national scale.

The Threat of Mis-Information: The increased utilization of social media has, however, also resulted in the sharing and spread of misinformation which has negative implications on the attainment of social cohesion. Misinformation comes in various forms but the most common are fake news and cyber-propaganda – these have the potential to cause societal fragmentation and exclusion with far-reaching consequences. Africa is amenable to this threat of misinformation posed by social media due to poor infrastructure to support, maintain and regulate the flow of information on social media platforms and this has been the major impediment to social cohesion in South Africa (Adegoke, 2018). According to Fischer et al. (2021), a cross-sectional study of the use of technology during lockdown showed that the use of web searches and social media platforms as opposed to government websites increased the likelihood for the population to access and spread health misinformation. In addition, there was an increase in cyber-crime in the form of online fraudsters during the pandemic (TransUnion, 2021) and this made people less likely to communicate with each other. However, during the COVID-19 public health emergency, the South African government was able to leverage social media in two mitigating strategies namely the elevation of social media as an essential service for communication and actively overwhelming communication channels with up-to-date information on managing lockdown and the pandemic. Citizens have also worked tirelessly in the management of the pandemic through social media.

According to Bosch (2020), members of the South African society were using 'coveillance' or rather, they were watching each other through social media posts to stay updated on compliance with lockdown restrictions, sharing critical health information and news material and publicizing people who were contravening lockdown regulations. This was an expression of people coming together because some of the social media posts tagged the government and even the police to take action - a mark of solidarity and unity of purpose. To mitigate the threat of misinformation, the government took advantage of the plethora of social media outlets like Facebook, Twitter, WhatsApp and others by compiling very short and timely, easily digestible and attractive media that they circulated on social media to keep the South African population informed on the unfolding of the pandemic. According to the South African Government (2020), Minister Mthembu praised the role of media in providing vital information on the pandemic both locally and internationally, thanking journalists and think tanks for their devotion to engagement on social media. This has largely been a success in reducing the level of misinformation and fake news present on the internet as a whole. According to Trifonova (2020), there are generally four reasons for using social media namely to pass the time, for entertainment, and to stay up to date with news – the COVID-19 pandemic resulted in a demand for relevant information on the unfolding of the pandemic which translated into a greater utilisation of social media.

Implications for Policy - The Impact of Social-Media on Social Cohesion: The implications for the impact of social media on social cohesion in South Africa are complex and multifaceted. From the above discussion, it is clear that social media is both contributing to the problem of attaining social cohesion since it is used in some cases to enhance societal cleavages and social conflict - Yet simultaneously, it is also working as a tool to potentially solve the problem of social cohesion. Since the media has been strengthening interactions both within and across groups during the COVID-19 pandemic and this has been true in the South African experience. Given the difficulty in defining social cohesion, the South African government must identify and

focus on key factors such as social inequality, poverty and social exclusion of people based on race and or gender that influence social cohesion in the country. Measuring these factors will facilitate the government in the formulation of key policies that are designed to materially achieve social cohesion. According to scholars like Burns: et al. (2018) and (Patel, 2021b) inter alia, social cohesion can only be achieved so long as equality of economic opportunities and social inclusion is attained in society, therefore, prioritizing solving poverty and inequality should be the first step towards social cohesion.

Additionally, social media has demonstrated its significance in the construction, communication and consumption of meaning which are the foundational ingredients of a socially cohesive society (Lama, 2020). Therefore, national plans to enhance social cohesion such as the South African National Development Plan 2030 should be developed with the role of social media laid out since it forms the greater part of what the contemporary South African society considers the public domain as has been experienced in 2020 until current. Furthermore, there needs to be the development of regulatory frameworks to guard against the negative effects of social media in the public domain. "A truly transformed media can play a greater and more meaningful role in ensuring that citizens have greater access to information," (*SANews*, 2018).

5. Conclusion and Recommendations

Conclusion

Social media and social cohesion are intricately related social concepts in South Africa. Despite the absence of a standard definition, the essence of a cohesive society is rooted in the endeavors to address the vestiges of apartheid in South Africa namely institutionalized racism, social class inequalities and exclusion, anti-migrant sentiments and marginalization of minority groups like women and children to name a few. Social cohesion is, therefore, an expression of an ideal participatory democracy. The proliferation of ICTs that have rapidly evolved in recent years, revolutionizing how people communicate through social media, has had various implications for social cohesion. In recent years, there has been a greater uptake of social media as a communication tool in the public domain. The dominance of social media in the public domain has exposed the impact of social media to be a double-edged sword used to promote social cohesion on one hand and the other, used as a tool for social conflict. Given the unique nature of social media as dominating social interaction in the public sphere, as well as its potential to be utilized in the manner seen fit by different social forces, interests and social groups, the government of South Africa must actively incorporate social media into national plans aimed at enhancing social cohesion. The COVID-19 pandemic has demonstrated that social media positively enhances social cohesion if utilized in the interest of the public good.

Recommendations

- The government of South Africa must intensify efforts to conceptualize social cohesion in South Africa - The IJR has already begun developing a Social Cohesion Index for South Africa utilizing data from SARB – the index measures three indicators of social cohesion namely equality and social inclusion, social and institutional trust, and shared identity (IJR, 2017b). Social cohesion can only be achieved if the government has laid out targets and this is dependent on a definitive conceptual framework of the concept.
- Research has shown the continued widespread use of social media is likely to continue after the crisis of COVID-19 has passed. Working from home and using social media for work and for bridging social interests and social groups has become a norm in the past year and a half. Therefore, national plans to enhance social cohesion such as the South African National Development Plan 2030 should be formulated with the role of social media clearly laid out since it forms the greater part of what the contemporary South African society considers the public domain as has been experienced in 2020 until current.
- Additionally, it is critical to have government regulation that protects the privacy of personal information and the circulation of misinformation. The implementation of POPIA is a positive step in the right direction that has to be augmented.
- To achieve social cohesion, the government needs to address the issue of inequality in the country. Ameliorating this problem has the potential to coincide with an equal and opposite increase in social

solidarity since members of the South African population can communicate on an equal economic footing.

Further Research

- Social cohesion is a broad area of study that requires continued research in fleshing out the impediments to achieving social cohesion in the country. Research into the perceptions of people at the grassroots level and their inputs to create a more unified and cohesive society should be conducted. The fact that South Africa has not yet emerged as a socially cohesive society almost three decades into its independence is a testament to the work that must be carried out to achieve social cohesion in the country.
- Social media has been on the rise in recent years and never has this fact been truer than in the last year and a half. Social media has come to dominate the public domain of social interaction, culture reformulation, operation of business and promotion of solidarity through the mass communication of shared meanings. Further research must be conducted to identify the means of enhancing the positive roles of social media in society and ameliorating the negative ones.
- Tracer studies should be conducted over some time to track trends and patterns of social media use in promoting social cohesion in South Africa;

References

Adegoke, Y. (2018). The distraction of fake news and WhatsApp for the African media business, Quartz Africa. Available at: https://qz.com/africa/1474020/facebooks-whatsapp-fake-news-and-africas-media/ (Accessed: 29 June 2022).

Bosch, T. (2020). Citizen surveillance and social media during South Africa's lockdown, Corona Times. Available at: https://www.coronatimes.net/citizen-surveillance-social-media-south-africa-lockdown/ (Accessed: 29 June 2022).

Budree, A., Fietkiewicz, K. & Lins, E. (2019). Investigating usage of social media platforms in South Africa, *The African Journal of Information Systems,* 11(4), 24.

Burns, J. (2018). Defining Social Cohesion. SALDRU Working Paper 216. Southern Africa Labour and Development Research Unit, University of Cape Town. Available at: https://econpapers.repec.org/paper/ldrwpaper/216.htm (Accessed: 29 June 2022).

Businesstech. (2021). The biggest and most popular social media platforms in South Africa, including TikTok. Businesstech, Available at: https://businesstech.co.za/news/internet/502583/the-biggest-and-most-popular-social-media-platforms-in-south-africa-including-tiktok/ (Accessed: 29 June 2022).

Chan, J., To, H. P. & Chan, E. (2006). Reconsidering Social Cohesion: Developing a Definition and Analytical Framework for Empirical Research, *Social Indicators Research*, 75(2), 273–302.

Constitution of the Republic of South Africa. (1996). South African Government. Available at: https://www.gov.za/documents/constitution-republic-south-africa-1996 (Accessed: 29 June 2022).

Curran, J., Morley, D. & Walkerdine, V. (eds) (1996). Cultural studies and communications. London; New York: New York, NY: Arnold; Distributed exclusively in the USA by St. Martin's Press.

David, A. (2018). Social cohesion and inequality in South Africa. Working Paper, AFD Papiers de Recherche 2018-63.

Dexter, P. (2004). Social cohesion and social justice in South Africa HSRC. 2946. Human Sciences Research Council HSRC. Available at: http://www.hsrc.ac.za/en/research-data/view/1893 (Accessed: 29 June 2022).

Fischer, A. E. (2021). Changes in Perceptions and Use of Mobile Technology and Health Communication in South Africa During the COVID-19 Lockdown: Cross-sectional Survey Study, *JMIR formative research*, 5(5), 25273.

Fonseca, X., Lukosch, S. & Brazier, F. (2019). Social cohesion revisited: a new definition and how to characterize it, *Innovation: The European Journal of Social Science Research*, 32(2), 231–253.

Gillwald, A. (1993). The Public Sphere, The Media and Democracy. *Transformation: Critical Perspectives on Southern Africa,* 21, 65-77. https://muse.jhu.edu/

Habermas, J. (1989). The Structural Transformation of the Public Sphere: An Inquiry into a Category of Bourgeois Society. Polity Press.

IJR. (2019a). SA Reconciliation Barometer 2019, IJR. Available at: https://www.ijr.org.za/portfolio-items/sa-reconciliation-barometer-2019/ (Accessed: 29 June 2022).

IJR. (2017b). Towards a Social Cohesion Index for South Africa using SARB data, *IJR*. Available at: https://www.ijr.org.za/portfolio-items/towards-a-social-cohesion-index-for-south-africa-using-sarb-data/ (Accessed: 29 June 2022).

Jakubowicz, A. (2007). The media and social cohesion, in E. Dawson, J. Jupp, and J. Nieuwenhuysen (eds) Social Cohesion in Australia. Cambridge: Cambridge University Press, 158–169. Available at: https://doi.org/10.1017/CBO9780511481574.015.

Jeannotte, M. S. (2000). Social Cohesion Around the World: An International Comparison of Definitions.

Jenson, J. (1998). Mapping social cohesion: the state of Canadian research. Ottawa: Canadian Policy Research Networks.

Kemp, S. (2020). Digital 2020: South Africa, DataReportal – Global Digital Insights. Available at: https://datareportal.com/reports/digital-2020-south-africa (Accessed: 29 June 2022).

Kemp, S. (2021). Digital in South Africa: All the Statistics You Need in 2021 — DataReportal – Global Digital Insights. Available at: https://datareportal.com/reports/digital-2021-south-africa (Accessed: 29 June 2022).

Kiguwa, P. & Langa, M. (2015). Rethinking social cohesion and its relationship to exclusion', *Psychology in Society*, (49), 1–6. Available at: https://doi.org/10.17159/2309-8708/2015/n49a1.

Lama. (2020). [2020] Social media statistics and usage in South Africa, Talkwalker. Available at: https://www.talkwalker.com/blog/social-media-stats-south-africa (Accessed: 29 June 2022).

Marlowe, J. M., Bartley, A. & Collins, F. (2017). Digital belongings: The intersections of social cohesion, connectivity and digital media, *Ethnicities*, 17(1), 85–102.

Maxwell, J. (1996). Social Dimensions of Economic Growth. Department of Economics, University of Alberta.

Media is key to social cohesion. (2018). SAnews. Available at: https://www.sanews.gov.za/south-africa/media-key-social-cohesion (Accessed: 29 June 2022).

Meiring, T., Kannemeyer, C. & Potgieter, E. (2018). The gap between rich and poor: South African society's biggest divide depends on where you think you fit in, SALDRU Working Papers. 220. Southern Africa Labour and Development Research Unit, University of Cape Town. Available at: https://ideas.repec.org/p/ldr/wpaper/220.html (Accessed: 29 June 2022).

Njozela, L., Shaw, I. & Burns, J. (2021). Towards Measuring Social Cohesion in South Africa: Lessons for Nation Branding Developers, *The Strategic Review for Southern Africa*, 39(1). Available at: https://doi.org/10.35293/srsa.v39i1.320.

OECD. (2011). Perspectives on Global Development 2012: Social Cohesion in a Shifting World. Paris: Organisation for Economic Co-operation and Development. Available at: https://www.oecd-ilibrary.org/development/perspectives-on-global-development-2012_persp_glob_dev-2012-en (Accessed: 29 June 2022).

Palmary, I. (2015). Reflections on social cohesion in contemporary South Africa, *Psychology in Society*, (49), 62–69. Available at: https://doi.org/10.17159/2309-8708/2015/n49a5.

Patel, J. (2021a). Intensifying economic insecurity may threaten South Africa's social cohesion - The Mail & Guardian. Available at: https://mg.co.za/opinion/2021-02-16-intensifying-economic-insecurity-may-threaten-south-africas-social-cohesion/ (Accessed: 29 June 2022).

Patel, J. (2021b). Social Cohesion Hangs in the Balance as South Africans Feel Economically Insecure: Reflections from the South African Reconciliation Barometer, Africa Portal. Institute for Justice and Reconciliation (IJR). Available at: https://www.africaportal.org/publications/social-cohesion-hangs-balance-south-africans-feel-economically-insecure-reflections-south-african-reconciliation-barometer/ (Accessed: 29 June 2022).

Schiefer, D. & van der Noll, J. (2017). The Essentials of Social Cohesion: A Literature Review, *Social Indicators Research*, 132(2), 579–603. Available at: https://doi.org/10.1007/s11205-016-1314-5.

South African Government. (2015). Minister Nathi Mthethwa: Social Cohesion Summit | South African Government. Available at: https://www.gov.za/speeches/minister-nathi-mthethwa-social-cohesion-summit-30-mar-2015-0000 (Accessed: 29 June 2022).

Statistics South Africa. (2019). 2019 | Statistics South Africa'. Available at: https://www.statssa.gov.za/?m=2019 (Accessed: 29 June 2022).

Statistics South Africa. (2021). '2021 | Statistics South Africa'. Available at: https://www.statssa.gov.za/?m=2021 (Accessed: 29 June 2022).

Struwig, J. (2013). Towards a Social Cohesion Barometer for South Africa, in State of the Nation: South Africa. HSRC Press, 399–421.

'The SA Social Media Landscape Report 2021 » Ornico Media Monitoring. (2021), 30 June. Available at: https://website.ornico.co.za/2021/06/30/the-social-media-landscape-report-2021/ (Accessed: 29 June 2022).

TransUnion. (2021). One Year after COVID-19, TransUnion Research Shows Digital Fraud Attempts in South Africa Have Increased Exponentially, TransUnion. Available at: https://newsroom.transunion.co.za/one-year-after-covid-19-transunion-research-shows-digital-fraud-attempts-in-south-africa-have-increased-exponentially/ (Accessed: 29 June 2022).

Trifonova, V. (2020). How Coronavirus Has Changed the Way We Use Social-Media, GWI. Available at: https://blog.gwi.com/chart-of-the-week/social-media-amid-the-outbreak/ (Accessed: 29 June 2022).

Journal of Economics and Behavioral Studies (JEBS)
Vol. 14, No. 2, June 2022 (ISSN 2220-6140)

Audit Characteristics and Financial Reporting Timeliness of Nigerian Listed Non-Financial Institution

Eghosa Godwin Inneh[1], Isaiah Omotayo FAKUNLE[1], Romoke Rafiat BUSARI[2] & Ibrahim Gbenga OLATUJI[3]
[1]Department of Management and Accounting, Obafemi Awolowo University, Ile-Ife, Nigeria
[2]Centre for Distance Learning, Obafemi Awolowo University, Ile-Ife, Nigeria
[3]Department of Accounting and Finance, Kings University, Odeomu, Nigeria
eghinneh@oauife.edu.ng, rbusari@oaucdl.edu.ng, jonafac01@yahoo.com, ig.olatunji@kingsuniversity.edu.ng

Abstract: The management is accused of opportunistic behavior and financial report delays following the global financial scandal. Consequently, studies examine the effect of client-specific characteristics on financial report timeliness, and Nigeria is not an exemption. Recent studies focus on the effect of auditor's attributes in mitigating or explaining the rationale for the financial reporting delay. However, limited studies exist in Nigeria on the effect of audit characteristics on financial reporting timeliness in non-financial institutions. Our study contributes to knowledge by examining the effect of audit characteristics on the financial reporting timeliness in the Nigerian listed non-financial institution. We select 450 firm-year observations from 2011 to 2020 using a purposive sampling technique and estimate the model using the Ordinary Least Square Method (OLS). The result reveals that audit price and audit firm size positively affect financial reporting timeliness, while audit tenure is negative but insignificantly related to financial reporting timeliness. Our study concludes that delivering the financial report to the users takes longer when the auditors charge higher fees, reflecting an increase in auditors' workload resulting from additional audit risk and procedure. Also, large audit firms take a long time to communicate financial reports taking due care in forming audit opinions to ensure audit independence and reduce the litigation risk arising from the audit assignment.

Keywords: *Financial reporting timeliness, Financial Reporting Quality, audit price, audit firm size, audit tenure.*

1. Introduction

Financial regulatory bodies across the globe stipulate the time listed firms are expected to furnish their financial statement to the general public (Although this varies from country to country). The essence is to ensure timely and reliable financial statements. However, despite the timeliness Act and its associated penalties, firms still fail to file their reports within the deadline, and Nigeria is not an exception. Most of the listed firms in Nigeria fail to publish their financial reports as of when they are due (Eze & Nkak, 2020; Modugu et al., 2012) despite being one of the bases for assessing the relevancy and the reliability of financial information (Abdillah et al., 2019; Omer, 2017; Oraka et al., 2019). Over four decades, stakeholders have been concerned about the financial reporting timeliness; this is evidenced by the study (see: Dyer & McHugh, 1975). To date, regulatory bodies, academic researchers and practitioners are concerned about the financial reporting timeliness (Dao & Pham, 2014; Oussii & Boulila – Taktak, 2018; Zandi & Abdullah, 2019). The investors view the delay in publishing financial information as an immoral act, which may result in an unusual loss (Chamber & Penman, 1984). Hence, the financial report should be communicated before it loses value, as various stakeholders depend on it to make an informed economic decision (Bryant – Kutcher 2013; Muhammad, 2020; Rahmawati, 2018).

Abdillah et al. (2019), assert that the time efficiency of communicating financial information depends on the management and the statutory auditors. To a reasonable extent, timeliness reporting is a tri-party affair (the management, auditors and regulatory bodies). The management prepares the financial statement, and the regulatory bodies state the guidelines and set the timeframe for firms to file their financial reports. In the same vein, the auditors are expected to work efficiently without overriding the relevancy and reliability of the financial report. The timeliness of delivering the published account is affected by the statutory audit as the audit process must be completed (Johnson, 1998; Reza & Poudeh, 2014; Puspitasari, 2014); hence the auditors are under pressure to timely communicate the financial report to the stakeholders (Oussii & Boulila – Taktak, 2018). The audit characteristics such as audit price, audit size and audit tenure play a major role in the financial reporting timeliness and quality. Studies show a divergent view on the effect of audit price on financial reporting timeliness. Despite this fact, audit price still plays a critical role in financial reporting timeliness. The auditor increases the audit effort to timely complete the process when the client pays a premium price (*Egbunike & Asuzu, 2020; Modugu et al., 2012*).

Conserve, auditors might charge a higher audit fee despite delaying the delivery of the financial information to the external stakeholders due to the demand for extra auditor's workload to complete the audit process (Behn, 2006; Habib et al., 2018). The auditor is expected not to trade off quality for timeliness reporting, hence must be independent and exercise due care when performing the audit assignment. The above-mentioned may account for charging a premium audit price regardless of the reporting timeliness. Also, audit size significantly affects the reporting timeliness. Large audit firms, usually known as the Big Four, have the resources to complete the audit process (Owusu-Ansah & Leventis, 2006). However, a large audit firm faces more litigation risk than a smaller firm, demonstrating a high level of independence and due process when executing the audit assignment, resulting in financial reporting delays (Abernathy et al., 2017; Owusu-Ansah & Leventis, 2006)). The audit tenure positively affects the financial reporting timeliness. Based on the learning effect theory, a long-tenured auditor completes the audit process in a short period due to the auditor being familiar with the client's operations and nature of business (Dao & Pham, 2014; Habib & Bhuiyan, 2011; Lee et al., 2009). Athough, Dao & Pham (2014) argue that the positive association of short-term audit tenure with financial report delay could be shortened when a firm engages industry-specialized auditors. There is no consensus on the determinants of timeliness reporting (Ogbodo & Jiagbogo, 2021; Oraka et al., 2019). Prior studies failed to provide ways to minimize financial reporting delays (Dao & Pham, 2014) or the reasons for the audit delays.

The audit characteristics provide information for financial reporting delays & minimization of audit delays. However, most Nigerian studies (e.g., Adebayo & Adebiyi, 2016; Dibia & Onwuchekwa, 2013; Efobi & Okougbo, 2014; Ibadin et al., 2012; Iyoha, 2012; Oraka et al., 2019) examine the firm-specific determinants neglecting the effect of audit characteristics on financial reporting delay. Our study examines the effect of audit characteristics, also considering firm-specific characteristics as a control variable, on the timeliness of financial reporting. We proxy audit characteristics using audit price, tenure, and size. Although in Nigeria, there is limited empirical evidence (Arowoshegbe et al., 2017; Muhammad, 2020) that examines the audit and firm-specific characteristics determinants of financial reporting delay. The limited extant studies failed to focus solely on the non-financial environment. Also, our study considers auditors' tenure as one of the variables of audit firm attributes, which is rarely considered by the limited studies on the subject matter but is well established in the studies (e.g., Abdillah, 2019; Dao & Pham, 2014; Muhammad, 2020) to be an important variable in minimizing the audit report lag. Our study focuses on the non-financial sector, justify on the ground that the Nigerian government is driving toward economic diversification and encouraging growth in the non-oil sectors. There is a need for timely and reliable financial reporting in this sector to encourage economic decisions and reduce investment decision risk arising from prospective investors. Also, there is a dearth in the literature on the subject matter in the non-financial sector.

As most studies are conducted using the banking sector (see; Muhammad, 2020). The study contributes to the knowledge by examining the determinants of timeliness of financial reports from a holistic perspective, considering both the audit and firm-specific characteristics that directly affect audit report timeliness in the non-financial sector. We employ the two-stage systematic sampling technique to select the samples used for the study. The rationale for using the sampling techniques is to ensure that every category of the non-financial institution is proportionately represented and that members in each category are equally likely to be selected. We select 45 listed non-financial firms as a sample, and the scope of the study covers 2011-2020. The study chooses 2011 as the base year is introducing the International Financial Reporting Standard (IFRS), which significantly impacts the time of completing the financial report. Our findings show that financial reporting delay results from higher audit fee evidencing, untimely completion of the audit process probably due to weak internal control increasing audit workload. Also, our study shows that audit size is inversely related to financial reporting timeliness. The result indicates that large audit firms that exercise a high level of independence and intent to minimize litigation risk could be responsible for the financial reporting delay. However, the long audit tenure does not significantly minimize financial reporting delays. The remaining part of the paper is subdivided into; section two, a literature review, and section three, methodology. Section four covers the result and discussion, and finally, section five is the conclusion and recommendation.

2. Review of Literature

The financial reports are expected to be devoid of material misstatement (DeAngelo, 1981) and contain qualitative characteristics such as relevancy, reliability, comparability and understandability (IASB, 2008). External stakeholders hold firms that release their financial report on time in esteem value, as their investment decisions are affected by the report's availability. The secondary data collected is analyzed using the ordinary least square method. Investors prefer financial reports to be communicated as soon as possible (Habib et al., 2018). Also, the financial reporting reliability and relevancy may be lost due to financial reporting delays (Abdillah et al., 2019; Afify, 2009). The external stakeholders assume timely financial reports as credence and observable financial reporting quality (Bamber et al., 1993), although Carcello et al. (1992) presume timely as a perceived quality of financial reports. Financial reporting timeliness is the time difference between the company's accounting year-end and the date at which the financial report is communicated to the public (Abernathy et al., 2018; Akhalumeh et al., 2017; Chen et al., 2022; Egbunike & Asuzu, 2020; Van Horne, 1995). Timely reporting is the basis for evaluating the viability of firm and management performance (Abdillah et al., 2019), reducing investment risk (Ashton et al., 1989) and minimizing agency costs arising from information asymmetry (Christopher et al., 2017; Jaggi & Tsui, 1999; Lambert et al., 2012; Lang & Lundholm, 1999) and management opportunistic behavior (Oussii & Boulila – Taktak, 2018; Zandi & Abdullah, 2019).

Financial reporting issues are determined by the management, auditors and financial regulatory bodies. The management's responsibility is to prepare and present a financial statement devoid of material misstatement under a regulatory framework. Despite this fact, management tends to engage in opportunistic behavior by exploiting the information asymmetry consistent with agency theory. Studies (Abdillah et al., 2019; Christopher et al., 2017; Jaggi & Tsui, 1999; Jensen and Meckling, 1976) argue that opportunistic management behavior is directly affected by the deadline set by the financial regulatory bodies for companies to submit their financial reports. In ensuring that the financial report is devoid of material misstatement, the statute requires the listed firm to engage an independent auditor to examine the financial statement and form an opinion. The investors appoint an independent and skilled auditor to complete the audit process and communicate quality financial reporting to the stakeholders. Hence, auditors are expected to work efficiently without overriding the relevancy and reliability of financial reports (Habib et al., 2018). The audit characteristics such as audit price, audit size and audit tenure affect the financial reporting timeline.

Theoretical Framework and Hypothesis Development: The auditors are expected to communicate the financial report in time as various stakeholders rely on the financial statement in making economic decisions (Muhammad, 2020; Ozcan, 2019). The audit characteristics that could affect audit delay are audit price & tenure.

Audit Price and Financial Reporting Timeliness: The audit price is expected to reflect the audit cost and quality. In ensuring timeliness reporting, the auditor should commit sufficient and efficient resources (human and capital) to the audit assignment. The economic bonding theory posits that auditors' timely reporting increases the audit fee (Simunic, 1980). The additional audit resources committed, such as personnel and overtime work required to timely complete the audit report, result in higher audit fees (Owusu-Ansah & Leventis, 2006; Rubin, 1992). Based on this fact, the audit price is negatively associated with the financial reporting timeliness (*Egbunike & Asuzu, 2020;* Lee et al., 2009; *Modugu et al., 2012*). Conversely, delay in the communication of financial reports could increase the audit fees, reflecting the client's weak internal control leading to an increase in the audit process and procedure (Behn, 2006; Habib et al., 2018; Ho & Ng, 1996; Lobo & Zhao, 2013). This argument indicates a possibility of a positive association between audit price and financial reporting timeliness. Based on those mentioned above, we posit a significant relationship between audit price and the timeliness of financial reporting.
$\mathbf{H_{11}}$: There is a significant relationship between audit price and financial reporting timeliness.

Audit Firm Size and Financial Reporting Timeliness: DeAngelo (1981) posits that audit quality is a function of audit firm size. The audit size plays a significant role in the quality and timely completion of audit assignments. Normally, large audit firms engage skilled and experienced audit personnel, technological capabilities, and resources than small audit firms (Owusu-Ansah & Leventis, 2006). Given the resources at the

disposal of large audit firms, the firm is expected to complete the audit assignment in a shorter period. Conversely, large audit firms may take longer to complete the audit report. The large audit firms' due process and comprehensive audit procedure may delay financial reports. Furthermore, clients may compel small audit firms to timely issue financial reporting, which is less likely with large audit firms (Shin et al., 2017). Against this Backdrop, we posit a bi-directional relationship between audit size and financial reporting timeliness.
H_{2I}: There is a significant relationship between audit size and financial reporting timeliness.

Audit Tenure and Financial Reporting Timeliness: The audit tenure is the successive years an audit firm spent on a particular audit engagement before being replaced with another audit firm. Based on the learning effect theory, long audit tenure reduces delays in audit reports. The assertion is premised on the auditors' acquaintance with the client's nature of the business, operation and internal control over time. In the same vein, the proponents of long audit tenure presume that in the early years of engagement, auditors will take a longer time to communicate the clients' financial information to the users (Dao & Pham, 2014; Habib & Bhuiyan, 2011; Lee et al., 2009) due to auditor unfamiliarity with the client's business environment. In line with this argument, long audit tenure reduces financial reporting lag. Contrary to this, the proponents (Carcello & Nagy, 2004; Lim & Tan, 2010) of audit switch view that long audit tenure compromises audit independence and the reliability of the timely financial report. The familiarity threat due to long tenure audit could impair auditor objectivity and independence. The audit switch proponents recommend that audit clients engage industry specialists to weaken the negative association between short audit tenure and financial reporting timeliness (Dao & Pham, 2014). In line with the above argument, we hypothesize that there is a significant relationship between audit tenure and financial reporting timeliness.
H_{3I}: There is a significant relationship between audit tenure and the timeliness of financial reporting.

Nigerian Regulatory Framework on Timeliness Reporting: Regulations such as the Companies and Allied Matters Acts (CAMA) 2004 & (CAMA) 2020; Financial Reporting Council of Nigeria Act (FRCN) 2011, and Investment & Securities Act (ISA) 2007 indicate the time listed firms should file their' report. The Companies and Allied Matters Act (CAMA) 2004, S. 587 & S. 848 and CAMA 2020, S.822 & S. 848 stipulate that companies incorporated in Nigeria must duly file their audited annual report with the commission within 42 days following the annual general meeting. However, failure to file for a successive period of 10 years will result in the firm's delisting. Furthermore, S 58(3) of the Financial Reporting Council of Nigeria Act (FRCN) No. 6 of 2011 mandates the listed companies to present their audited financial statements no later than 60 days after the date of approval by the Board. Failure to comply with this attracts civil, administrative and criminal sanctions.

Also, to discourage late submission of audited annual reports by companies, section 60(1) of the Investment and Securities Act (ISA) 2007 places a sanction of a lump sum of ₦1,000,000 and a variable cost of ₦25,000 per day for the number of days at which the company fails to submit the audited financial statements to the commission. The Act provides that all listed companies must file their quarterly financial reports no later than 30 days from the end of each quarter. From the above measures, it could be inferred that Nigerian regulatory bodies put in place necessary measures to enforce timely reporting among the companies. However, the penalty fee for delay in communicating financial reporting is immaterial to the defaulters (see; Eze & Nkak, 2020, P39); this could be why there are still numerous defaulters of the financial reporting timeliness Act in Nigeria.

3. Methodology

Research Design and Model Specification: We employ a longitudinal research design by hand-collecting secondary data from the audited annual report of 45 listed non-financial institutions for ten years, covering 2011-2020, resulting in 450 firm-year observations. The longitudinal research design allows for the collection of large observations as data are collected on a firm-year basis. We estimate the data collected using the panel least square method. Our study also introduces the firm-specific characteristics such as inherent risk, profitability, leverage, firm size and loss included in the model as control variables.

Model Specification: The study measures the timeliness of financial reporting (TRF) in line with the studies (Daferighe & George, 2020; Hassan, 2016), and the difference between the audit report day and the fiscal year-end. Timeliness reporting is a function of audit and management entities (Abdillah et al., 2019); determined by audit and clients' specific characteristics. Our study measures audit characteristics using audit tenure, price, and size. The audit tenure reduces the audit delay because the auditor is familiar with the client's business, operations and internal control. Based on the learning effect, there is a presumption that the auditors learn over the successive year of a particular audit assignment. Hence, studies (e.g., Blankley et al., 2014; Doa & Pham et al., 2014*;* Daferighe & George, 2020; Ezat, 2015) evidenced a negative association between auditor tenure and the timeliness of financial reporting. Conversely, studies (Lai & Cheuk, 2005) show no significant relationship between audit tenure and financial reporting delay.

The economic bonding theory posits that timeliness reporting attracts extra audit costs (Simunic, 1980). However, studies have shown a mixed reaction to the association between audit price and timeliness of financial reports, while empirical studies show that there is a negative association between audit price and financial report delay (*Egbunike & Asuzu, 2020; Modugu et al., 2012*). Also, there is evidence of positive association (e.g., Behn, 2006; Habib et al., 2018; Ho & Ng, 1996; Lobo & Zhao, 2013), indicating that the complexity of the client's transaction or internal control weakness results in more audit procedures and delay of financial reporting communication to the user. The audit firm size is expected to have a significant association with the timeliness of the financial report. Studies (Afify, 2009; Schmidt & Wilkins, 2013) show that large audit firms are negatively associated with timeliness reporting. Conversely, studies (e.g., Shin et al., 2017) show that audit firm size positively correlates with financial reporting timeliness. Studies (Abernathy et al., 2017; Owusu-Ansah & Leventis, 2006) show that audit firm size increases the financial reporting reliability and reduces the time of communicating financial reports to users.

In contrast, other studies (Habib et al., 2018; Shin et al., 2017) presume that large audit firms are not under client pressure to timely release the financial report hence taking a long time to complete the audit process minimizes the litigation risk. The study hypothesizes a significant association between audit size and financial reporting timeliness based on the mixed results. Based on those mentioned above, the functional relationship between timeliness reporting and audit characteristics proxied by audit price, audit tenure and audit characteristics in econometric form is given as follows;

$$\text{frt}_{it} = \beta_0 + \beta_1 \text{ audpr}_{it} + \beta_2 \text{ big_four}_{it} + \beta_3 \text{ audten}_{it} + e_{it} \qquad \text{Eqn (1)}$$

Where, frt_{it} = financial reporting timeliness of crossectional unit i over time t
audpr_{it} = audit price of crossectional units over time t
big_four_{it} = large audit firm of crossectional units over time t
audten_{it} = auditor tenure of crossectional units over time t,

The study introduces firm-specific characteristics such as firm size, loss, inherent risk, leverage and profitability to avoid spurious regression. The *Firm size measured* by the natural logarithm of total assets is predicted to have an inverse relationship with financial reporting timeliness, based on the fact that larger firms have stronger internal control systems (Hassan, 2016).

The firm's loss is measured as a dichotomous variable of one of the firms suffering a loss in the accounting year and zero otherwise. The firm loss is expected to have a positive association with the financial reporting timeliness, as firms that have suffered a loss in the accounting year have a higher tendency to engage in earnings management which invariably affects the delay in communicating the financial information, consistent with the studies (Oussii & Boulila – Taktak, 2018; Zandi & Abdullah, 2019). Our study predicts a positive association between inherent risk, measured by the ratio of the current asset to total asset, and this is in line with the studies (Dao & Pham, 2014; Walker & Hay, 2013). In addition, our study introduces capital structure as part of the control variables, which is still one of the firm-specific characteristics. We predict a positive association between capital structure, measured as the proportion of total debt to total asset, and financial reporting timeliness consistent with the study (Alkhatib & Marji, 2012; Ocak & Ozden, 2018). Our assumption is premised on the fact that a highly leveraged firm increases the auditor's workload and demands extended auditing time. Finally, the study introduces profitability, measured by return on assets, and expects a negative relationship between the two variables in line with the studies (Ocak & Ozden, 2018; Shukeri & Nelson, 2011). Thus, the introduction of the control variables to Model 1 resulted in Model 2, which

stated as: $frt_{it} = \beta_0 + \beta_1\ audpr_{it} + \beta_2\ big_four_{it} + \beta_3\ audten_{it} + \beta_4 ca_ta_{it} + \beta_5\ loss_{it} + \beta_6\ lev_{it} + \beta_7\ lev_{it} + \beta_8\ roa_{it} + +e_{it}$ Eqn (2).

Measurement of Variables

Table 1: Definition of Variable

Variable Code	Definition of Variables
Audit delay Audde	Measure in days, the length of time between the company's accounting year-end and the date at which the financial statement is signed by the external auditor (Daferighe & George, 2020)
Auditor's Tenure Audten	The successive number of years that the auditor has audited the client (Ocak & Ozden, 2018)
Audit price Audpri	Log of the aggregate amount given to external auditor(s) (Akhalumeh, Izebkhai, & Ohenhen, 2017)
Size of the firm (firm_size)	Natural log of total assets (Akhalumeh, Izebkhai, & Ohenhen, 2017)
Loss (Loss)	The indicator variable is assigned the value of 1 if the reported net income is less than zero or negative and assigned 0 if not (Dao & Pham, 2014)
Big_four (Big four)	Indicator variable that is assigned the value of 1 if the external auditor is one of the Big 4 audit firms, and 0 if not (Rusmin & Evans, 2017)
Current/total ratio ca_ta	Measured as the ratio of the current asset to the total asset (Dao & Pham, 2014)
Return on asset Roa	Measure as net income divided by total assets (Akhalumeh, Izebkhai, & Ohenhen, 2017); (Shofiyah & Suryani, 2020).
capital leverage	Measured as values of current and non-current liabilities divided by aggregate assets Rusmin and Evans (2017).

Source: Authors' Compilation (2022).

4. Results and Discussion

Descriptive Statistics: Table 2 shows the descriptive statistics of variables employed in Equation 2. The mean value for financial reporting timeliness is 104 days revealing financial reporting delay. The minimum and maximum values of the financial reporting delay are 0 and 234 days, respectively. The financial reporting delay could result from the immaterial fine for late communication of financial reporting (see; Eze & Nkak, 2020: P39) and other factors concerning the audit process. The Audit price (AUDPR) represents one of the variables used to proxy the auditor's attribute. The audit price has an average mean and median value of 9.44 and 9.58. The skewness value of -1.56 shows that the data are negatively skewed. The average value does not have economic importance unless it is delogged through the exponential power resulting in a mean value of ₦ 12,581,780. The result in Table 3 shows that large audit firms in the non-financial institutions control 57 per cent of the entire audit market, evidenced by a mean value of 0.57. Table 2 shows that the audit tenure average (mean) and median values are (4.06) years and four years, respectively.

This shows that the audit client switches her auditor every four years, which is within the mandatory audit rotation of ten years. Also, the average audit tenure statistic that a client engages an auditor for a short or medium-term basis. The minimum and maximum values for an auditor's tenure are 1 and 9 years, respectively, indicating that audit clients comply with the mandatory auditor's rotation of 10 years. Furthermore, Table 3 depicts the descriptive statistics of the firm-specific characteristic. The capital structure measured by the leverage (LEV) shows that 53% of the total capital is financed by equity, indicating that the industry has appropriate equity and debt capital mix. Also, the Table shows that the level of inherent risk,

measured by the ratio of the current asset to the total asset (ca_ta), is 0.56; the statistics indicate that 56 percent of the total asset is in the form of current assets. The high level of current assets may result in more audit effort due to increases in the firms' liquidity. The level of profitability is low, with an average of six percent. The mean statistics reveal that 22 percent of the firm-year observation suffers a loss within the study period. The statistic of return on assets and loss variables indicates that the sector is not too viable.

Table 2: Descriptive Statistics

Variables	Mean	Median	Maximum	Minimum	Std. Dev.	Skewness	Kurtosis	Jarque-Bera	Obs.
Frt	103.92	102.00	234.00	0.00	35.04	0.44	5.06	84.49	450
Audpri	9.44	9.58	13.36	2.64	1.54	-1.56	9.36	841.94	450
big_four	0.57	1.00	1.00	0.00	0.50	-0.28	1.08	67.26	450
Audten	4.06	4.00	9.00	1.00	2.45	0.49	2.13	28.91	450
ca_ta	0.56	0.50	0.66	0.01	0.99	17.45	33.30	365.	450
Loss	0.22	0.00	1.00	0.00	0.41	1.38	2.91	128.26	450
Lev	0.53	0.56	0.99	0.01	0.22	-0.42	2.49	16.17	450
Roa	0.06	0.038	4.28	-0.93	0.39	9.29	102.01	170407.1	450
Firm_size	16.28	16.47	19.97	10.63	1.99	-0.71	3.26	34.67	450

Authors' computation (2022). Where frt signifies financial reporting timeliness, audpri connotes audit price, big_four represents auditors' type, audten represents auditors' tenure, ca_ta connotes the ratio of current assets to total assets, lev represents leverage, and roa denotes profitability.

Correlation Analysis: Table 3 reports the degree of pairwise association among the variables employed in the study. The Big four and audit price has a positive and statistical correlation (Pc= 0.147, Pv= 0.003), suggesting that large auditing firms usually charge high fees. The higher audit fee charged by large audit firms may result from their reputation, provision of quality services, and international affiliation, among others. The loss has a significant correlation with financial reporting timelines, the big four and audit tenure. The positive correlation of loss with financial reporting timeliness (Pc= 0.142, Pv= 0.004) suggests that firms incurring loss in the accounting year-end usually have longer audit report lag because loss represents bad news to investors. Hence, the management usually delays reporting bad news to the market as they likely exercise discretion and manipulate the financial information. Hence, the auditor spends time in the audit process to detect earnings management. Also, firm size significantly correlates with audpri, big_four, loss, lev and roa. Firm size has significant positive association with audit price and big four (Pc= 0.704, Pv= 0.000), (Pc= 0.274, Pv= 0.000) respectively. The results show that big firms engage large audit firms for their audit engagement and consequently pay higher fees. Lastly, the Pearson correlation coefficient in the model is less than 0.8 (the rule of thumb); therefore, the statistics connote that the model is free from a problem with multicollinearity.

Table 3: Correlation Matrix

Correlation Probability	1	2	3	4	5	6	7	8	9
1. frt	1.000								
	0.000								
2. audpri	0.060	1.000							
	0.230	**0.000**							
3. big_four	0.034	0.147	1.000						
	0.495	**0.003**	**0.000**						
4. audten	0.054	0.055	-0.046	1.000					
	0.280	**0.271**	**0.354**	**0.000**					

5. ca_ta	-0.007	0.053	0.072	-0.045	1.000				
	0.890	**0.285**	**0.149**	**0.362**	**0.000**				
6. loss	0.142	0.045	-0.200	-0.109	-0.056	1.000			
	0.004	**0.369**	**0.000**	**0.029**	**0.264**	**0.000**			
7. lev	0.005	0.010	0.105	-0.076	0.115	0.096	1.000		
	0.925	**0.046**	**0.036**	**0.125**	**0.020**	**0.054**	**0.000**		
8. roa	0.056	-0.111	0.012	0.151	-0.027	-0.267	-0.181	1.000	
	0.258	**0.026**	**0.804**	**0.002**	**0.583**	**0.000**	**0.000**	**0.000**	
9 firm_size	-0.046	0.704	0.274	0.045	-0.020	-0.147	0.231	-0.122	1.000
	0.359	**0.000**	**0.000**	**0.366**	**0.690**	**0.003**	**0.000**	**0.014**	**0.000**

Authors' computation (2022). Where frt signifies financial reporting timeliness, audpri connotes audit price, big_four represents auditors' type, audten represents auditors' tenure, ca_ta connotes the ratio of current assets to total assets, lev represents leverage, and roa denotes profitability. While the unbold figure represents Pearson pairwise correlation, the bold and italic figures represent probability value.

Interpretation and Discussion of Finding: Our study uses three ordinary least square methods of Pooled OLS, Fixed Effect Method (FEM) and Random Effect Method (RAM) in estimating Equation 2. The Breusch-Pagan and Hausman tests are used to select the appropriate analysis methods. The result of the Breusch-Pagan test and Hausman test report statistics of (X^2 =32.44, P<0.05) and (X^2 =38.35, P<0.05), respectively, indicate that the fixed-effect method is the most appropriate method of reporting. Table 4 reveals that the regressors of the model jointly explain 49 per cent of total variations in the financial reporting timeliness after adjusting for the loss in degree of freedom. The F-statistic (22.49) and (P<0.05) of the estimated model an indications that the model is statistically significant. The result shows that four, audit price, Big four, loss and firm size, out of the eight regressors are statistically significant at 5 per cent. Table 4 shows that audit price has a positive and significant relationship with financial reporting timeliness (coef= 3.41, t= 3.82) at a 5 percent level of significance.

The result indicates that the premium audit fees may reflect delays in the communication of financial reports due to the audit client's weak internal control resulting in extra audit workload and audit procedures. The result implies that a higher audit fee reflects auditors' effort in ensuring a financial reporting quality which is at the expense of timely delivery of the financial report to other users. The result is in line with studies (Habib et al., 2018; Lobo & Zhao, 2013; Rubin, 1992) that posit that auditors may charge a positive abnormal audit fee due to a delay in completing. The audit assignment increases auditors' effort. However, the result contradicts the studies (Ezat, 2015; Leventis et al., 2005; Modugu et al., 2012), who contend that a higher audit fee reduces the financial reporting delay by increasing audit effort by engaging more personnel, working overtime, or increase the technological input. The result is consistent with the economic bonding theory but contradicts similar Nigerian studies limited (Ezat, 2015; Modugu et al., 2012). The differences could be attributable to the sector, time covered and sample employed in the study.

Also, the Table shows that audit firm size has a positive and significant association with financial reporting quality, evidenced by statistics of (coef= 6.67, t= 2.87). The result indicates that large audit firms are more independent and objective than smaller ones. Hence, they tend to spend more time before appending their signature to the financial report. In other words, the result shows that the large audit firms are not under pressure from the client to timely release the financial statement. Although, auditors' independence and objectivity may be at the expense of the financial reporting timeliness. The possible reason could be to minimize the litigation risk arising from outside stakeholders. The result is consistent with the studies (Habib et al., 2018; Shin et al., 2017) but contradicts the studies (Afify, 2009; Schmidt & Wilkins, 2013). Furthermore, Table 4 shows that auditor tenure is negative but insignificant with financial reporting timeliness, evidenced by statistics of (coef= -0.44, t= -1.88). The result reveals that the auditor-client relationship fails to influence audit time efficiency over time positively.

Our findings contradict the learning effect theory and studies (Dao & Pham, 2014; Habib & Bhuiyan, 2011; Lee et al., 2009; Lim & Tan, 2010; Suryanto et al., 2017) that hold the view that extended auditor tenure reduces the audit delay time due to familiarity with the client's nature of business, operation, internal control

mechanism and audit process. Conversely, our result is in line with the studies (Amirul & Salleh, 2014; Dewi et al., 2019; Gholamreza et al., 2017; Lai & cheuk, 2005; Lee & Jahng, 2008). Moreover, Table 4 depicts a positive and significant association between loss and financial reporting timeliness, as shown in Table 4 (coef= 13.80, t= 2.19). The result implies that the auditor may delay communicating the accounting information to the outside stakeholders when the firm suffers a loss in the accounting year. The accounting loss increases the audit risk; hence auditor performs a substantive test to ascertain the client's concern. Also, the delay may be attributable to the auditor exercising due care as the loss signals the possibility of earnings management or fraudulent reporting practices. The result is consistent with the studies (Dao & Pham, 2014; Habib et al., 2018). Finally, Table 4 indicates that the client's firm size is negative and significantly related to financial reporting timeliness, supported by statistics of (coef= -2.64, t= -2.26). The result is consistent with studies (Dao & Pham, 2014; Hassan, 2016).

Table 4: Regression Estimate, Dependent Variable: Financial Reporting Timeliness

	Pooled OLS		**Fixed Effect**		**Random Effect**	
Variables	Coef.	T-stat.	Coef.	T-stat.	Coef.	T-stat.
AUDPR	1.36	0.51	3.41	3.82***	1.38	0.52
BIG_FOUR	0.71	0.55	6.67	2.87***	0.78	0.15
AUDTEN	-0.31	-0.91	-0.44	-1.18	-0.37	-0.55
CA_TA	0.23	0.72	-0.35	-0.74	0.28	0.17
LOSS	10.07	2.38**	13.80	2.19**	11.17	2.44**
LEV	-0.96	-0.73	2.08	0.40	-0.66	-0.07
ROA	7.32	1.32	7.32	0.71	8.61	1.93*
FIRM_SIZE	-0.09	-0.37	-2.64	-2.26**	-0.14	-0.07
C	91.09	2.90	104.94	8.48	88.47	3.50
R-sq	0.05		0.53		0.06	
AdjR-sq	0.02		0.49		0.03	
F-statistic	2.91		22.49		3.12	
Prob. (F-statistic)	0.04		0.000		0.03	
Breusch-Pagan			32.44(p<0.05)			
Hausman Test			38.35(p<0.05)			

Source: Authors Computation (2021). Table shows the coefficients and t-statistics of regression from equation 3. Pooled OLS, Fixed Effects and Random Effects were conducted; the fixed-effect method is chosen as the most suitable based on the outcome of the Hausman Test. Where ***, ** & * indicated level of significance at 1%, 5% and 10% respectively.

5. Conclusion and Recommendations

The study investigates the effect of audit characteristics on financial reporting timeliness among Nigerian non-financial institutions from 2011 to 2020, resulting in 450 firm-year observations. In achieving the objectives, three hypotheses are postulated. We measure the audit price as the natural logarithm of the total audit fee. We proxy audit firm size as a dichotomous variable and ascribed one when the client engages the Big four for the audit assignment and zero otherwise. Our study measures audit tenure as the successive period in years the auditor is engaged before being replaced. The financial reporting timeliness is measured as the time difference expressed in days between the date the external auditor signed the audited annual

report and the date the company ends its financial year. The study is limited to Nigerian-listed non-financial institutions. We hand-collect secondary data on variables of interest from the audited financial report of sampled firms. The ordinary least square of the fixed-effect method is employed, following the Breusch-Pagan test and Hausman test.

The result shows that audit price and audit firm size have a positive and significant association with the financial reporting timeliness, while audit tenure is negative but insignificantly associated with financial reporting quality. The study concludes that audit price and size have a positive and significant association with financial reporting timeliness. Our findings connote that the auditors demand high audit fees when there is a delay in communicating the financial report due to increased workload, possibly resulting from the client's weak internal control and an increase in the audit process, procedure and risk. Also, large audit firms delay their report possibility to minimize litigation risk by exercising due care throughout the entire audit process. Although the financial report delay could affect the external stakeholders' economic decisions, it is important to increase the credence and reliability of the financial information. We recommend that the regulatory bodies reduce the number of days that firms should file their file financial report as it provides the management avenue to manipulate the financial report, especially for firms that have suffered a loss in the accounting year. Also, the fine for defaulting should be increased to deter firms from breaching the financial reporting Act.

References

Abdillah, M. R., Mardijuwono, A. W. & Habiburrochman, H. (2019). The Effect of Company Characteristics and Auditor Characteristics on Audit Report Lag. *Asian Journal of Accounting Research,* 4(1), 129-144.

Abernathy, J. L., Barnes, M., Stefaniak, C. & Weisbarth, A. (2017). n International Perspective on Audit Report Lag: A Synthesis of the Literature and Opportunities for Future Research. *International Journal of Auditing,* 21(1), 100–127. doi:10.1111/ijau.12083

Abernathy, J. L., Kubick, T. R. & Masli, A. (2018). Evidence on the Relation between Managerial Ability and Financial Reporting Timeliness. *International Journal of Auditing,* 22(2), 185–196. doi:10.1111/ijau.12112

Adebayo, P. A. & Adebiyi, W. K. (2016). Effect of Firm Characteristics on the Timeliness of Corporate Financial Reporting: Evidence from Nigerian Deposit Money Banks. *International Journal of Economics, Commerce and Management,* 4(3), 369-381.

Afify, H. E. A. (2009). Determinants of Audit Report Lag. *Journal of Applied Accounting Research,* 10(1), 56-86. doi:10.1108/096754420910963397

Akhalumeh, P. B., Izevbekhai, M. O. & Ohenhen, P. E. (2017). Firm Characteristics and Audit Report Delay in Nigeria: Evidence from the Post-IFRS Adoption Era. International Accounting and Taxation Research Group, Faculty of Management Sciences, University of Benin City. Retrieved from Http://www.atreview

Alkhatib, K. & Marji, Q. (2012). Audit Reports Timeliness: Empirical Evidence from Jordan. *Procedia - Social and Behavioral Sciences,* 62, 1342-1349.

Amended Companies and Allied Matters Act. (2020).

Amirul, S. M. & Salleh, M. F. (2014). Convergence to IFRS and Audit Report Lag in Malaysia. *Research Journal of Finance and Accounting,* 5(23), 9-16.

Arowoshegbe, A. O., Unaimikogbo, E. & Adeusi, A. S. (2017). Factors Affecting Timeliness of an Audit Report in Nigeria. *Journal of Accounting, Business and Finance,* 1(1), 26-38.

Ashton, R. H., Willingham, J. & Elliot. (1987). An Empirical Analysis of Audit Delay. *Journal of Accounting Research,* 25(2), 275-292.

Bamber, E. M., Bamber, L. S. & Schoderbek, M. P. (1993). Audit Structure and other Determinants of Audit Report Lag: An Empirical Analysis. *Auditing: A Journal of Practice and Theory,* 12(1), 1-23.

Behn, B. K., Searcy, D. L. & Woodroof, J. B. (2006). A Within Firm Analysis of Current and Expected Future Audit Lag Determinants. *Journal of Information Systems,* 20(1), 65–86.

Blankley, A. I., Hurtt, D. N. & MacGregor, J. E. (2014). The Relationship between Audit Report Lags and Future Restatements. *AUDITING: A Journal of Practice & Theory,* 33(2), 27–57. doi:https://doi.org/10.2308/ajpt-50667

Bryant-Kutcher, K., Peng, E. & Weber, D. (2013). Regulating the timing of disclosure: Insights from the acceleration of 10-K filing deadlines. *Journal of Accounting and Public Policy,* (32), 475–494.

Carcello, J. V. & Nagy, A. L. (2004). Audit Firm Tenure and Fraudulent Financial Reporting. *Auditing: A Journal of Practice & Theory,* 23(2), 55–69.

Carcello, J., Hermanson, R. & McGrath, N. (1992). Audit Quality Attributes: The Perceptions of Audit Partners, Preparers, and Financial Statement Users. *Auditing: A Journal of Practice and Theory,* 11, 1-15.

Chambers, A. E. & Penman, P. H. (1984). Timeliness of Reporting and the Stock Price Reaction to Earnings Announcements. *Journal of Accounting Research,* 22(1), 21-47.

Chen, C., Jia, H., Xu, Y. & Ziebart, D. (2022). The Effect of Audit Firm Attributes on Audit Delay in the Presence of Financial Reporting Complexity. *Managerial Auditing Journal,* 37(2), 283-302. Retrieved from Https://doi.org/10.1108/MAJ-12-2020-2969

Christopher, E. T., Edmonds, J. E., Vermeer, B. Y. & Vermeer, T. E. (2017). Does Timeliness of Financial Information Matter in the Governmental Sector. *Journal of Accounting and Public Policy,* 36(2). Retrieved from https://doi.org/10.1016/j.jaccpubpol.2017.02.002

Daferighe, E. E. & George, E. M. (2020). Audit Firm Attributes and Financial Reporting Quality of Quoted Manufacturing Firms in Nigeria. *International Journal of Economics and Management Studies (SSRG-IJEMS),* 7(1), 43-55.

Dao, M. & Pham, T. (2014). Audit Tenure, Auditor Specialization and Audit Report Lag. *Managerial Auditing Journal,* 29(6), 490-512.

DeAngelo, L. E. (1981). Auditor Size and Audit Quality. *Journal of Accounting and Economics,* 3(3), 183-199.

Dewi, N., Azam, S. & Yusoff, S. (2019). Factors Influencing the Information Quality of Local Government Financial Statement and Financial Accountability. *Management Science Letters,* 9(9), 1373-1384.

Dibia, N. O. & Onwuchekwa, J. C. (2013). An Examination of the Audit Report Lag of Companies Quoted in the Nigeria Stock Exchange. *International Journal of Business and Social Research,* 3(9), 8-16.

Dye. (2018). Corporate Governance and Agency Conflicts. *Journal of Accounting Research,* 46(5), 1143-1181.

Dyer, J. C. & McHugh, A. J. (1975). The Timeliness of the Australian Annual Report. *Journal of Accounting Research,* 13(3), 204-219.

Efobi, U. & Okougbo, P. (2014). Timeliness of Financial Reporting in Nigeria. *South African Journal of Accounting Research,* 28(1), 65-77. doi:10.1080/10291954.2014.11463127

Egbunike, P. A. & Asuzu, P. (2020). Audit Fees and Audit Report Lag. *EPRA International Journal of Research and Development (IJRD),* 5(7), 181-187.

Enofe, A. O., Osarumwense, O. E. & Ejiemen, C. O. (2013). Audit Delay and Audit Quality: The Nigerian Experience. *Research Journal of Social Science & Management,* 3(4), 75-83.

Ezat, A. N. (2015). The Impact of Audit-Related Factors on Audit Report Lag for the Egyptian Listed Non-Financial Companies. *Journal of the Faculty of Commerce for Scientific Research,* 10(1), 1-45.

Eze, P. G. & Nkak, P. (2020, January). Corporate Governance and Timeliness of Audited Reports of Quoted Companies in Nigeria. *International Journal of Business and Management Invention (IJBMI),* 9(1). Retrieved from https://ssrn.com/abstract=3524383

Financial Reporting Council Act. No. 6. (2011).

Gholamreza, K., Tahere, K. & Saba, S. (2017). Auditor Tenure, Auditor Industry Expertise and Audit Report Lag, Evidence of Iran. *Iranian Journal of Management Sciences (IJMS),* 10(3), 641-666.

Habib, A. & Bhuiyan, M. U. (2011). Audit Firm Industry Specialisation and the Audit Report Lag. *Journal of International Accounting, Auditing and Taxation,* 20(1), 32-44.

Habib, A. & Muhammadi, A. H. (2018). Political Connections and Audit Report Lag: Indonesian Evidence. *International Journal of Accounting & Information Management,* 26(1), 59-80. doi:10.1108/IJAIM-08-2016-0086

Hassan, M. Y. (2016). Determinants of Audit Report Lag: Evidence from Palestine. *Journal of Accounting in Emerging Economies,* 6(1), 13-32.

Ho, S. W. & Ng, P. P. (1996). The Determinants of Audit Fees in Hong Kong: An Empirical Study. *Asian Review of Accounting,* 4(2), 32–50.

Ibadin, I. M., Izedonmi, F. P. & Ibadin, O. (2012). The Association between Selected Corporate Governance Attributes, Company Attributes and Timeliness of Financial Reporting in Nigeria. *Research Journal of Finance and Accounting,* 3(9).

International Accounting Standards Board. (2008).

Investments And Securities Act. (2007).

Iyoha, F. (2012). Company attributes and the timeliness of financial reporting in Nigeria. *Business Intelligence Journal,* 5(1), 41-49.

Jaggi, B. & Tsui, J. (1999). Determinants of Audit Report Lag: Further Evidence from Hong Kong. *Accounting and Business Research,* 30(1), 17-28.

Jensen, M. C. & Meckling, W. H. (1976). Theory of the Firm: Managerial Behavior, Agency Costs and Ownership Structure. *Journal of Financial Economics,* 3(4), 305-360.

Johnson, L. E. (1996). Further evidence on the determinants of local government audit delay. Journal of Public Budgeting, Accounting & Financial Management, 375-397. Retrieved from https://doi.org/10.1108/JPBAFM-10-03-1998-B003

Lai, K. W. & Cheuk, M. C. (2005). Audit Report Lag, Audit Partner Rotation and Audit Firm Rotation: Evidence from Australia. Working paper. American Accounting Association.

Lambert, R., Leuz, C. & Verrecchia, R. (2012). Information Asymmetry, Information Precision, and Cost of Capital. *Review of Finance,* 16, 1–29. Retrieved from https://doi.org/10.1093/rof/rfr014

Lang, M. & Lundholm, R. (1999). Corporate Disclosure Policy and Analyst Behavior. *Accounting Review,* 71, 467–493.

Lee, H. Y., Mande, V. & Son, M. (2009). Do Lengthy Auditor Tenure, and the Provision of Non-Audit Services by the External Auditor Reduce Audit Report Lags? *International Journal of Auditing,* 13(2), 87-104.

Lee, H. & Jahng, G. (2008). Determinants of Audit Report Lag: Evidence from Korea- An Examination of Auditor-Related Factors. *The Journal of Applied Business Research,* 24(2), 27-44.

Leventis, S., Weetman, P. & Caramanis, C. (2005). Determinants of Audit Report Lag: Some Evidence from the Athens Stock Exchange. *International Journal of Auditing,* 9(1), 45–58.

Lim, C. Y. & Tan, H. T. (2010). Does Auditor Tenure Improve Audit Quality? Moderating Effects of Industry Specialization and fee Dependence. *Contemporary Accounting Research,* 27(3), 923-957.

Lobo, G. J. & Zhao, Y. (2013). Relation Between Audit Effort and Financial Report Misstatements: Evidence from Quarterly and Annual Restatements. *The Accounting Review,* 88(4), 1385–1412.

Modugu, P. K., Eraghe, E. & Ikhatua, O. J. (2012). Determinants of Audit Delay in Nigerian Companies: Empirical Evidence. *Research Journal of Finance and Accounting,* 3(6), 46-54.

Muhammad, M. I. (2020). Effects of Auditor Attributes on Audit Reporting Lag: Empirical Evidence from Nigerian Service Firms. *Asian Journal of Empirical Research,* 10(4), 127-136.

Ocak, M. & Ozden, E. A. (2018). Signing Auditor-Specific Characteristics and Audit Report Lag. A Research from Turkey. *The Journal of Applied Business Research,* 34(2), 277-294.

Ogbodo , C. O. & Jiagbogu, N. K. (2021). Effect of Determinants of Financial Reporting Timeliness on Reporting Timeliness: An Empirical Study of Nigeria Banks. *International Journal of Trend in Scientific Research and Development(IJTSRD),* 5(3), 17-24.

Ömer, F. G. (2017). Timeliness of corporate reporting in developing economies: Evidence from Turkey. *Accounting and Management Information Systems,* 16(3), 219-239. doi:10.24818/jamis.2017.03001

Oraka, A. O., Okoye, J. A. & Ezejiofor, R. A. (2019). Determinants of financial reporting timeliness: An empirical study of Nigeria deposit money banks. *International Journal of Advanced Academic Research,* 5(9), 18-35.

Oussii, A. A. & Boulila, T. N. (2018). Audit Committee Effectiveness and Financial Reporting Timeliness. *African Journal of Economic and Management Studies,* 9(1), 34–55. doi:10.1108/ajems-11-2016-0163

Owusu-Ansah, S. & Leventis, S. (2006). Timeliness of Corporate Annual Financial Reporting in Greece. *European Accounting Review,* 15(2), 273–287. doi:10.1080/09638180500252078

Ozcan, A. (2019). The Investigation of Factors Affecting Timeliness of Financial Statements: Evidence from Turkey. *Journal of Mehmet Akit Ersoy University Economics and Administrative Sciences University,* 6(2), 485-495.

Puspitasari, K. D. (2014). Effect of Company Size, Subsidiaries, Leverage and KAP Size against Audit Delay. *Accounting E-Journal of Udayana University,* 8(2), 283-299.

Rahmawati, E. (2018). Information Content and Determinants of Timeliness Financial Reporting: Evidence from an Emerging Market. *Academy of Accounting and Financial Studies Journal,* 22(4), 1-15.

Reza, S. & Poudeh, T. (2014). Audit Report Delay and Short-Term Debt Maturity. *Journal of Social Issues & Humanities,* 2(2), 32-36.

Rubin, M. A. (1992). Municipal Selection of a State or External Auditor for Financial Statement Audits. *Journal of Accounting and Public Policy,* 11(2), 155-178. doi:10.1016/0278-4254(92)90021-O

Schmidt, J. & Wilkins, M. S. (2013). Bringing darkness to light: The influence of auditor quality and audit committee expertise on the timeliness of financial statement restatement disclosures. *Auditing: A Journal of Practice & Theory,* 32(1), 221-244.

Shin, I. H., Lee, H. Y., Lee, H. A. & Son, M. (2017). How Does Human Resource Investment in Internal Control Affect Audit Reporting Lag? *Asia-Pacific Journal of Accounting & Economics,* 24(1-2), 195–215.

Shukeri, S. N. & Nelson, S. P. (2011). Timeliness Annual Audit Report: Some Empirical Evidence from Malaysia. Entrepreneurship and Management International Conference (EMIC 2), (pp. 1-23). Malaysia.

Simunic, D. A. (1980). The Pricing of Audit Services: Theory and Evidence. Jo*urnal of Accounting Research,* 18(1), 161–190. doi:10.2307/2490397

Suryanto, T., Thalassinos, J. E. & Thalassinos, E. I. (2017). Board Characteristics, Audit Committee and Audit Quality: The Case of Indonesia. *International Journal of Economics and Business Administration,* V(3), 44-57.

Van Home. (1995). Financial Management and Policy. Englewood Cliffs: Prentice-Hall.

Walker, A. & Hay, D. (2013). Non-Audit Services and Knowledge Spillovers: An Investigation of the Audit Report Lag. *Meditari Accountancy Research,* 21(1), 32–51.

Zandi, G. & Abdullah, N. A. (2019). Financial Statements Timeliness: The case of Malaysian Listed Industrial Product Companies. *Asian Academy of Management Journal,* 24, 127–141. doi:10.21315/aamj2019.24.s2.9

Journal of Economics and Behavioral Studies (JEBS)
Vol. 14, No. 2, June 2022 (ISSN 2220-6140)

Market Potential of Freshwater Fish Farmers in Limpopo Province

Master Maebane, Ntise Manchidi, Germinah Chiloane-Phetla
University of South Africa, South Africa
maebamm@unisa.ac.za, manchnh@unisa.ac.za, chiloge@unisa.ac.za

Abstract: O. mossambicus is one of the most cultured food fish worldwide. In sub-Saharan Africa, it is essential for meeting the need for food security, as it can be a cheap source of protein. Previous studies focused to some extent on the profitability of tilapia farmers. This study aims to make a scientific contribution by analyzing the market environment, and specifically the potential customers, of the O. mossambicus farmers who belong to small and medium enterprises in agriculture, by using a feasibility analysis framework. A mixed-methods approach was used to achieve the research objectives. Data were analyzed using the Statistical Package for the Social Sciences (SPSS), to compile descriptive and inferential statistics. The reliability and validity of the data collection instrument were measured using Chronbach's Alpha values. One-way analysis of variance (ANOVA) was the statistical method used, and the f-test was conducted to determine the statistical significance of the variables in the multivariate analysis. The overall results of the study showed that O. mossambicus farmers largely sell the fish fresh to individual consumers and informal fish traders at farm stalls. In contrast, fish traders bought the O. mossambicus frozen or smoked from other suppliers. Here, recommendations are made in respect of new entrepreneurial ventures, next steps for business consultants and other stakeholders in the O. mossambicus industry, and future research directions.

Keywords: *Freshwater fish, Market potential, O. mossambicus, SME farmers.*

1. Introduction

Globally, small and medium enterprises (SMEs) are regarded as the backbone of economies (Arokiasamy, & Ismail, 2009; Lopriore, 2009; Mutezo, 2013; Groepe, 2015; Bowmaker-Falconer & Herrington, 2020; Bosma, Hill, Ionescu-Somers, Kelley, Guerrero & Schott, 2021). In South Africa, the National Small Business Amendment Act (NSBAA) 29 of 2004 (RSA, 2004) defines a small business as "a separate and distinct business entity, together with its branches or subsidiaries, if any, including cooperative enterprises, managed by one owner or more, predominantly carried on in any sector or subsector of the economy". Although small businesses can operate in any sector, the focus of the study reported here, was on agriculture. According to Herrington and Kew (2016), cited in the Global Entrepreneurship Monitor (GEM) report, Africa (13%) and Europe (8%) had more entrepreneurs in the agricultural sector, than the less than 5% in the other three regions reported on (North America, Latin America and the Caribbean). A study conducted in South Africa by the Department of Trade and Industry (DTI, 2016) revealed that agriculture contributed only 2.3% to the gross domestic product (GDP); mining contributed 8%; manufacturing 13%; electricity 3.6%; construction 4%; trade and accommodation 15%; transport and communication 10%; finance and business services 20.9%; government services 17.4% and personal services 5.7%. Therefore, agriculture's contribution to the South African economy is the lowest of all the sectors.

Large enterprises contributed 64.5% of the total income in the agriculture sector, followed by small enterprises (20.1%), while micro- and medium-sized enterprises (MMEs) contributed 7.7% each (Statistics South Africa [Stats SA], 2017). Thus, MME contributions were lower than those of the other enterprises. In 2015, Pienaar and Traub revealed that there were approximately 35 000 white farmers in this country, regarded as the highly capitalized commercial sector, producing about 95% of agricultural output on 87% of total agricultural land, while the smallholder farming sector consisted of about four million black farmers, farming in the former homeland areas on 13% of the available agricultural land. Smallholder farmers are defined as "those who own small plots of land on which they grow subsistence crops and one or two cash crops and rely almost exclusively on family labor" (Food and Agriculture Organization [FAO], 2017a). The study by Pienaar and Traub (2015), which aimed to glean information on smallholder farmers in South Africa, emphasizes that smallholder agriculture represents a vehicle by which poverty reduction and rural development could be achieved. Smallholding in aquaculture contributes directly and indirectly to poverty reduction, especially in rural communities, by supplementing livelihoods, offering food security and reducing

poverty through such mechanisms as income generation, employment and diversified farming practices (Abdulla-al-Asif, et al., 2015; Béné, et al., 2016).

Thus, smallholder farms may assist in creating employment, particularly in South Africa, where the expanded unemployment rate increased by 1% from 37% to 38% between the fourth quarter of 2018 and the first quarter of 2019 (Stats SA, 2019). To boost employment, SMEs or smallholder farming operations need to be sustainable. The warm-water fish species considered for aquaculture in South Africa are Mozambique tilapia (Oreochromis mossambicus), Nile tilapia (Oreochromis niloticus), common carp (Cyprinus carpio) and the African sharptooth catfish (Clarias gariepinus) (Dekker, 2014; Department of Agriculture, Forestry and Fisheries [DAFF], 2014). Mozambique tilapia was selected for this study, because of legislative constraints on the other two species (Brink, Mair, Hoffman & Beardmore, 2002; Dekker, 2014; DAFF, 2018). Carp are currently blacklisted (Weyl, Ellender, Wasserman, & Woodford, 2015). It is problematic to acquire authorization for the Nile tilapia, which is commonly considered to be the most appropriate of the entire tilapia species for culturing as food fish and is the fastest grower (DAFF, 2018). In the rivers of Limpopo province, it is not yet legal to culture this species (nor is it legal in the rest of South Africa) (Dekker, 2014), which explains the selection of the slower-growing Mozambique tilapia for the larger study reported on here. The religious requirements of some consumers present some difficulty in marketing catfish (Tapela, Britz, & Rouhani, 2015), and it was therefore eliminated from the study. Tilapia is a broad name given to three genera in the Cichlidae family: Oreochromis, tilapia, and Sarotherodon.

2. Theoretical Background and Literature Review

In this section, previous studies were reviewed to illustrate the gap filled by this research. It starts by offering some background, followed by the local and national market potential of the O. mossambicus, its export market potential, specifications for purchasing the fish, and existing studies on tilapia.

Background: The quality and quantity of freshwater tilapia in South Africa are among the reasons why the growth of the industry is slow. A related problem is that freshwater farmers do not want to increase production volumes of the O. mossambicus unless there is an available market. Previous studies indicated that it is a supply-and-demand issue (Van Rooyen, 2013; Industrial Development Corporation (IDC), 2015; Gilliland, 2017; Oyeleke, 2017) – it is, therefore, possible that a market might not be created for freshwater tilapia. Although the agricultural feasibility of O. mossambicus farmers' SMEs has been established, as have such farms, the market feasibility has not yet been fully determined (Tapela et al., 2015; Phosa, 2018). Furthermore, as confirmed by research by the FAO (2017) and the DAFF (2018), these emerging farmers lack marketing skills. The current demand for tilapia – particularly its extension to other regions of South Africa – was addressed to some extent by conducting several training courses (Brink et al., 2002).

It is thus essential to analyze the market environment more thoroughly, and specifically the potential customers of O. Mossambicus farmers, who form part of agricultural SMEs. For this article, the market environment is taken to refer to the total of all the external variables and factors which can positively (or negatively) affect the existence and growth of a business (Neethling, 2013). An organization's parameters are determined by its purpose, environment and mission statement, as well as the values and experience of its managers/leaders (Erasmus, Strydom & Rudansky-Kloppers, 2016). Thus, to provide a theoretical grounding for the study, a feasibility analysis framework was used, as suggested by Longenecker, Petty, Palich, Hoy, Radipere and Phillips (2017). This framework suggests that it is essential to consider any market on two levels: the broad macro markets, and the micro markets (fragments or niches) – in this instance, to evaluate the potential O. mossambicus customers that a farm may serve.

If a market is described as a set of consumers or potential consumers who have buying power and unfulfilled needs (Longenecker et al., 2017), that definition needs to accommodate purchasing units (individual or business entities) or consumers. In any market, consumers need to have bought power – after all, customers without money or credit do not constitute a feasible market, since no transactions can occur. Notably, consumers would not purchase goods unless they are stimulated to do so, and such stimulation may take place only when a consumer recognizes an unsatisfied need. If consumers have defined requirements that must be met, and need money to meet those needs (Cant, 2017), then their needs, wants and demands will

drive their purchases (Van Aardt & Bezuidenhout, 2014). According to Kotler, Keller, Manceau and Hemonned-Goujot (2015), 'needs' describe fundamental human requirements, which become 'wants' when they are channelled to clearly defined objects that may satisfy those needs.

Local and National Market Potential of O. Mossambicus: In 2013 the IDC (2015), which investigated the potential for the production, processing and export of tilapia for the southern African market, determined that the local demand for tilapia equalled 1 491 tons, while local production satisfied 187 tons of this demand (total production of 234 tons less 47 tons of exports), with imports satisfying 1 304 tons. This is an indication that South African tilapia production does not satisfy local demand for fish. With regard to the demands of local fish buyers, the IDC (2015) found that many of the commercial buyers, whom they interviewed, believe tilapia is an acceptable product. The Fish and Chip Co., Woolworths, I&J, PicknPay, Ocean Basket and SeaHarvest offer tilapia as a product, by customer demand, which indicates that the fish is not an unknown quantity among retailers. The common view is that, should a reasonable price be discovered, neighborhood clients would increase their demand for this fish.

Nevertheless, other retailers such as Spar and Checkers do not perceive tilapia to be a feasible product to market to South African consumers. A multitude of dominant mercantile purchasers did, nevertheless, give attention to the feasibility of trading tilapia in their supermarkets (IDC, 2015). In Gauteng, Oyeleke (2017) found that the majority of consumers (58%) consume fish each week, whilst only more than a quarter (26%) consume it more than once a week; 10% eat it once in a while, and 6% do not eat fish at all. That same study reported that 85% of retailers buy fish weekly; while 15% do so more than once a week (Oyeleke, 2017). Importantly, Oyeleke (2017) found that 60% of purchasers require tilapia more than any other fish species, which means there might be a potential market for tilapia in Gauteng province.

Export Market Potential of O. Mossambicus: The distribution of consumers of this fish is not equal among, or even within, countries/regions, with differences in the volumes and per-capita consumption (FAO, 2016). The FAO (2016) reports that per-person fish consumption remained largely unchanged or even diminished in some countries in Africa (e.g., Côte d'Ivoire, Liberia, Nigeria and South Africa), while Japan experienced an increase. Since Asia has high levels of fish consumption, South Africa's tilapia export possibilities to Asia, America, Europe and the rest of Africa, needed to be investigated. In China, fish consumption per capita increased at an average annual rate of 6% from 1990–2010, to about 35.1 kg (Operation Phakisa, 2014). According to the FAO (2014), per-person fish consumption in the Asia-Pacific region is the greatest in the Pacific, followed by Southeast Asia, South Asia and North Asia. In spite of the fact that annual per-capita fish consumption in countries such as India and Pakistan is relatively low (2.85 and 0.6 kg, respectively), the great size of those populations leads to great volumes of fish being eaten – for example, India, this is equivalent to more than 3.4 million tonnes a year.

An FAO (2014) study concluded that, within countries, noticeably large geographical differences in fish consumption could be established due to particular geographic differences, notably where the populace resides near, or in the proximity of, great waterways or water bodies (e.g., the Mekong River and Cambodia's Tonle Sap). In addition, unsurprisingly, the existing data confirm a greater consumption rate of fish amongst coastal populations than amongst those who reside further inland. There was no fair divide between rural and urban areas; in 13 countries where data were available, the consumption of fish in rural areas exceeded that of urban areas, while in nine other countries, in urban areas fish consumption was higher, possibly due to the greater availability of the product in certain rural areas, and better buying power in some urban centres (FAO, 2014). In 2013, in the United States of America (USA), tilapia consumption amounted to 660 762 metric tons (mt), whereas in 2014 it was 633 759 mt (Fitzsimmons, 2017) – a decrease of about 27 003 mt. The FAO (2016) argues that despite the overall decline in tilapia consumption in the USA, the fish remains popular.

Fitzsimmons (2017) supports this conclusion, pointing out that tilapia is sometimes called aquatic chicken. A study by the Environmental Protection Agency (EPA, 2014) revealed that 86% of the fish consumed in the USA at that time was imported. The top imported species included freshwater fish, mainly tilapia (EPA, 2014). As the DAFF (2014) reports, in 2013, South Africa exported more than 86 tons of tilapia valued at approximately R1.4 million, with the top three export destinations being the United Arab Emirates, the USA and Zimbabwe. With regard to Africa, in Kenya, Charo-Karisa, Kyule and Obiero et al. (2014) found that tilapia

is the most frequently purchased fish. The study participants' diverse education levels were found to have no significant effect on their fish-buying preferences (Charo-Karisa et al., 2014). Similarly, gender grouping did not influence the purchase of fish, or consumption rates (Charo-Karisa et al., 2014). That study concluded that over 60% of Kenyan customers purchased fish chiefly from open markets, in fresh and fried forms (Charo-Karisa et al., 2014). Similarly, studies were conducted by Salehe, Luomba, Musiba, Mlaponi and Mghamba (2014) in Tanzania.

Gebrezgabher, Amewu and Amoah (2015) in Ghana, revealed that tilapia was the preferred fish. Moreover, a study by Britz, Hara, Weyl, Tapela and Rouhani (2015) revealed that, in South Africa, the Western Cape Department of Agriculture launched a project to assess the potential for semi-commercial/commercial fishing in public dams, to target the West-African expatriate market for freshwater fish. This followed a realization that an increasing number of shops are owned and run by storekeepers from a variety of African countries (amongst others, in Cape Town), that specializes in stocking food for foreigners, including frozen or dried/smoked fish (mostly tilapia) which is imported. This means that in other African countries the consumption of tilapia is much higher than in South Africa and that there is a potential market for local tilapia. In Egypt, fish is a classical and key building block of the diet, offering a fundamental root of affordable animal protein for the booming population (Operation Phakisa, 2014). Access to, and preference for, tilapia was found to be greater in communities located in Egypt's fish-manufacturing operations, than in other sectors of the population (Eltholth, Fornace, Grace, Rushton & Häsler, 2015).

In Botswana, at least 4 000 tons of fish is consumed annually (Southern African Development Community [SADC], 2016), of which only approximately 300 tons is produced in the region. Thus, there is a deficiency of 3 700 tons to be provided via imports, mostly from South Africa. However, the IDC (2015) found that, in 2013, South Africa exported only 36 tons of tilapia to Botswana, which is not enough considering that country's requirements, therefore Botswana seems to be a potential importer of tilapia from South Africa. In the Caprivi region, the consumption of freshwater fish ranked over beef, game and poultry, and has important economic value for the nation (African states bordering the Atlantic Ocean [ATFALCO], 2012). The Nordenfjeldske Development Services (NFDS, 2016) reports that, in Namibia, the yearly per-person consumption of fish is 12 kg, which constitutes 5% of overall protein intake and 14% of the overall animal protein intake. As the NFDS (2016) notes regarding Lesotho's per-person consumption, the addition of fish to overall protein intake and overall animal protein consumption is the lowest in the SADC region. There is a limited-capture fishery in Lesotho, given the country's shortage of fishery resources (FAO, 2008). The DAFF (2014a) believes South Africa could penetrate the markets of Lesotho, where there is limited consumption of tilapia.

Specifications for Purchasing O. Mossambicus: Globally, the FAO (2010) found that, of the fish targeted for human consumption, fish in live or fresh form was the preferred product, with a share of 49.1%, followed by frozen fish (25.4%); prepared or preserved fish (15.0%) and cured fish (10.6%). In South Africa, the IDC (2015) and the DAFF (2018) found that both fresh and frozen tilapia were preferred for consumption. As Yongming (2013) reports, in urban China the main tilapia processed products are sold as frozen whole fish, frozen fillets, fresh fish fillets, salted and/or smoked products, and canned and roasted fish fillets, while in the provinces of China, most of the fish for the domestic market are sold live to local restaurants. In Egypt, Eltholth et al. (2015) found that most of the manufactured tilapia was carried to wholesaler outlets and marketed to customers as fresh fish, whilst small amounts were prepared by cleaning, grilling or frying them. Access to, and consumption of, volumes of tilapia were found to be greater amongst communities in production areas, and lower in other communities, where both fresh and frozen tilapia were in demand. In Tanzania, Darko, Quagrainie and Chenyambuga (2016) found that 89.29% of consumers preferred medium- and larger-sized tilapia.

In addition, the authors found that consumers who preferred medium-sized tilapia said "it tastes good" (27.78%); "it is affordable" (25.26%); "it is readily available" (21.11%); "it is fleshy" (15.56%) and "it is easy to prepare" (10.56%) (Darko et al., 2016). Similarly, Oyeleke (2017) found that, in Gauteng, 54.5% of respondents considered taste above all other factors to influence their choice when buying fish. This is a clear indication that the taste, quality and price of tilapia influence consumption patterns. Notably, a small proportion of consumers (13.89%) who preferred medium-sized tilapia stated that medium-sized fish were not merely simple to dispense amongst households, but allowed every member of the family to consume an

entire fish. Darko et al. (2016) found that those consumers who preferred large-sized tilapia said it was "fleshy" (39.02% of consumers); "easy to prepare" (21.14%); "tasty" (13.01%); relatively "cheaper" (4.89%) and "readily available" (3.25%). Moreover, 98% of consumers were willing to pay more for large-sized than small-sized tilapia, but a small proportion (10%) were willing to pay more for farmed tilapia. The study further found that many consumers (80%) preferred to buy fresh tilapia, over smoked tilapia (Darko et al., 2016).

Previous Studies on Tilapia: Asmah (2008) and Yuan, Yuan, Dai and Gong (2017) studied the profitability of fish farms in Ghana and China, respectively, with Asmah (2008) analyzing the financial viability of farms in two regions of Ghana. First, based on the cost and revenue data, statics as pointers were established to assess the feasibility of each farm, and evaluate discounted cashflows. Asmah (2008) reported that the major restrictions found to influence the profit of subsistence farms were cheap fish and lower production rates. Yuan et al. (2017), who analyzed the economic profitability of tilapia farming in China, revealed that large farms had the highest cost and profit margins, small farms had the lowest margins, while medium-sized farms fell somewhere in between. They also found that the net profit of tilapia was very flexible and subject to changes in price, feed, rent and fixed costs, of which price elasticity was the highest, followed by feed, rent and fixed costs (Yuan et al., 2017). Oyeleke (2017), who studied the productivity and supply chain of aquaculture projects in Gauteng, South Africa, reported that fish farmers operated at 36% capacity in their projects.

Although the farmers were underutilizing their production capacity, Oyeleke (2017) found a 40% excess in the profitability margin at all the farms under study. Brink et al. (2002) studied the genetic enhancement and use of indigenous tilapia in southern Africa, paying attention to farm trials involving male tilapia, and an assessment of the potential social and economic effects on farming by small-scale farmers. Brink et al. (2002) found that on-farm trials of male tilapia did not materialize, because of a failure to produce enough male tilapia by the final year of the project. This activity was substituted by initiating a series of pilot studies to examine the overall importance of using small-scale tilapia culture as part of a larger group of rural development programs, working jointly with the Western Cape Department of Agriculture (Brink et al., 2002). While scanty data were available on this activity by the project end, the results confirmed the significant potential of small-scale aquaculture to guarantee food security and offer a means of securing the necessities of life for people in poor rural communities in southern Africa (Brink et al., 2002).

As regards the assessment of the potential social and economic influence of general male tilapia culturing by small-scale farmers, since the planned project did not materialize, Brink et al. (2002) examined the maintenance of small-scale aquaculture practices, conducted under the auspices of the University of Stellenbosch-sponsored Small-Scale Aquaculture Programme, and investigated biological, economic and social sustainability issues. The results showed the economic viability of the practices, but concerns remained over the long-term profitability of some of the culture systems. Indicators clearly showed, nonetheless, that participants in the program secured important improvements to their livelihoods, skills development, increased social capital and income, and better nutrition (Brink et al., 2002). Two decades later, the current study aims to make a scientific contribution by analyzing the market environment, and specifically the potential customers, of O. Mossambicus farmers who belong to agricultural SMEs, by using a feasibility analysis framework.

Aim and Objective of the Research: The primary objective of the study was to analyze the market environment and potential customers of O. mossambicus farmers. The secondary objectives were, first, to identify the customers, and their demands and specifications for purchasing the fish from O. mossambicus farmer SMEs in Limpopo province, South Africa; and second, to determine which factors (poor locality, ineffective marketing, lack of market knowledge, low product demand and increased competition) reduce the volume of O. mossambicus produced by farmers.

Contributions of the Study: Here, the researcher makes suggestions to help smallholder agricultural enterprises better understand the specific constraints around O. mossambicus farming, and seeks to put forward recommendations that will effectively improve the prospects of O. mossambicus farmers in this country. New entrepreneurial ventures and other stakeholders will benefit from the findings of this study,

before engaging with O. mossambicus farmer SMEs or undertaking related activities in the aquaculture sector. Lastly, this study can be utilized by business consultants to advise emerging entrepreneurs before they start enterprises in O. mossambicus farming. The study also makes a significant contribution towards developing a viable market framework, by analyzing and determining the feasibility of the market for O. mossambicus farmers in a developing country such as South Africa.

3. Research Methodology

In this study, the convergent mixed-methods design was used – an approach that requires a researcher to collect both quantitative and qualitative data in parallel (Leedy & Ormrod, 2014). For qualitative primary data collection, a semi-structured questionnaire was used with a few open-ended questions to guide further discussions during face-to-face interviews with retailers, fresh produce market (FPM) traders, and fish traders in Limpopo province. A semi-structured questionnaire was used to obtain participants' views and perceptions of who their customers are, and what their demands and specifications are for purchasing tilapia from O. mossambicus farmers. For quantitative primary data-collection purposes, a structured questionnaire was used to collect data from 90 O. mossambicus farmers who grow these fish in agricultural SMEs, and 30 consumers who eat the fish. When using quantitative structured questionnaires, the target population answers very structured questions which are statistically analyzed, to arrive at the findings. The data obtained from the structured questionnaires were used to establish who the customers were, and what their demands and specifications were for purchasing the O. mossambicus from these fish farmers.

To that end, the contact details of the O. mossambicus farmers were provided by the Department of Agriculture in Limpopo province. Descriptive statistics were used to describe the basic characteristics of the population, and allow the researcher to summarise the data in a straightforward and understandable manner (Zikmund, Babin, Carr & Griffin, 2013). Moreover, the study used inferential statistics to evaluate the effects of various factors surveyed with the O. mossambicus farmers, since such statistics are used to make inferences, or project from a sample to an entire population (Zikmund et al., 2013). The study used a one-way analysis of variance (ANOVA), which is the statistical method used for testing the null hypothesis. The thematic analysis approach was used to derive categories and codes for the qualitative analysis. This means of analyzing qualitative data entails searching across a data set, to identify, analyze and report the findings (Creswell, 2014). It is a method for describing data, but it also involves interpretation in the process of selecting codes and constructing themes in a study. The qualitative data were analyzed manually by the researcher, with the aid of word-processing software.

4. Findings and Discussion

This section presents the findings of the study, in line with the research objectives.

Reliability and Validity: The reliability coefficient (Cronbach's Alpha) for the items measured in the Wholesalers dataset was 0.53; for the Consumers and the Farmers datasets it was 0.46 and 0.23, respectively. While these values (particularly the latter two) fall below the prescribed value of 0.70 for an acceptable reliability coefficient, the coefficients may have been influenced downwards by the relatively smaller samples of wholesalers (n=20) and consumers (n=30) who responded to this survey.

Market Potential of Buying O. Mossambicus from Farmers: The total potential market, minus the market share of competitors, is equal to the target market. The target market is referred to as that portion of the total market that a small business can reach with its products or services (Strydom, 2015). In this section, the quantities, potential customers, supply and specifications of O. mossambicus are discussed.

Quantities of O. Mossambicus Sold Per Week by the Farmers of these Fish: Only six of the 90 O. mossambicus farmers could provide data on weekly sales, and those ranged between 10 kg and 1 667 kg a week. Given this limited information, it was impossible to calculate weekly sales by weight. The reason for such uncertainty is that the farmers do not keep records –either of weight or quantity. The fact that they do not keep records is a further indication of a lack of professionalism with regard to farming with O. mossambicus. The question arises: Are they merely farming O. mossambicus for personal consumption or as

survivalists, or because they created a cooperative with a minimum of five members, and hence qualified for a grant of R350 000 as part of the Cooperatives Act, 14 of 2005 (RSA, 2005)? With regard to the number of O. mossambicus sold, only 17 respondents could provide data, but without specifying the size of the fish sold. Weekly sales of O. mossambicus ranged between 3 and 8 100 fish, while the total local weekly sales amounted to 791 440 per year (15 220 x 52 weeks). Although the mean weekly sales for the 17 respondents, in terms of the number of O. mossambicus sold, was 895 per farmer (std. deviation = 1 924.01), nearly two-thirds (64%) sold fewer than 670 fish per week, while half of them sold fewer than 125 fish per week.

Potential Customers for o. Mossambicus, as Predicted by the Farmers of these Fish: Two-thirds of the farmers reported that the fish were bought by informal fish traders, while another third indicated that consumers bought O. mossambicus from their farms (Figure 1). The results are similar to those reported by Van Rooyen (2013) and the IDC (2015), who found that informal fish traders in local communities constitute the biggest market, as the industry's low production cannot meet the needs of the formal markets.

Figure 1: Customers who buy o. Mossambicus from Farmers

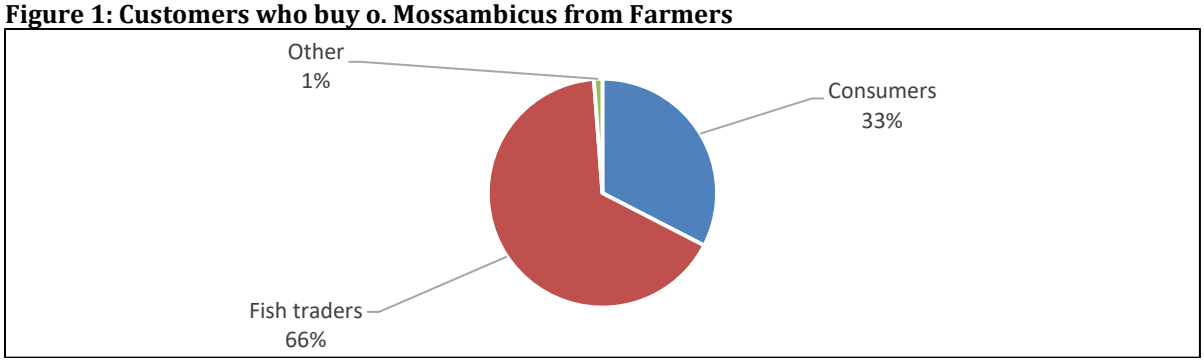

Fish Mostly Bought by the Traders: As regards the main types of fish species bought by the 20 fish traders (Figure 2), 40% bought hake while 35% bought O. mossambicus, followed by 15% who bought MAs banker. At the lower end of the spectrum of the purchase, thresholds were bream and the keepable species. It seems that fresh O. mossambicus is not a product that is well known amongst the majority of South African consumers, who are accustomed to hake (DAFF, 2018).

Figure 2: Fish Species Bought Most by Fish Traders (n=20)

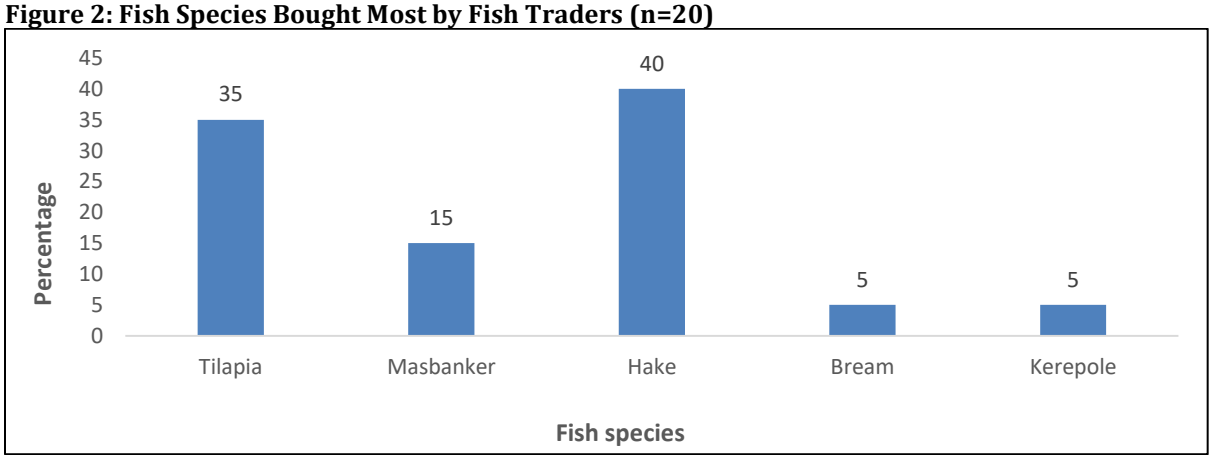

Suppliers of the Fish: The results in Table 1 reveal that the fish traders mainly bought hake from other suppliers (70%), processors (15%), or farmers (10%). Only one (5%) was bought from agents.

Table 1: Suppliers of Hake and O. Mossambicus (n=20)

Item	Farmers	Agents	Processors	Other Suppliers	Total
Place you normally buy the fish (hake)	10%	5%	15%	70%	100%
Place you buy O. mossambicus	12.5%	6.3%	12.5%	68.5%	100%

Frequency with Which Traders Buy o. Mossambicus: As regards the frequency of buying O. mossambicus, 44% of traders bought it weekly; 19% daily; and 13% bought it more than once a week (Table 2). The results are similar to those reported by Oyeleke (2017), who found that 85% of retailers bought fish on a weekly basis, and 15% bought more than once a week. This implies that O. mossambicus is a commonly stocked food fish in aquaculture.

Table 2: Traders' Frequency of Buying O. Mossambicus (n=16)

Item	Daily	More than once a Week	Weekly	More than once a Month	Monthly	Once in a while	Total
Frequency of buying O mossambicus	18.8%	12.5%	43.8%	0%	18.8%	6.3%	100%

Specifications for Purchasing O. Mossambicus: Of the 20 fish traders participating in the study, 55% bought O. mossambicus frozen/smoked; 10% bought it fresh; 5% bought it live and a further 5% bought it salted (Table 3). Of the fish traders, 25% bought it in 'another' form but did not specify. The majority of fish traders are situated in urban areas, and the IDC (2015) reported that tilapia is gutted and frozen for transport to markets or wholesalers.

Table 3: Specifications for Purchasing O. Mossambicus (n=20)

Form in which Available for Purchase	Live	Fresh	Frozen/Smoked	Salted	Other	Total
O. mossambicus	5%	10%	55%	5%	25%	100%

Sizes which O. Mossambicus Traders Buy: Of the 20 fish traders, 66.7% bought medium-sized (300 grams) O. mossambicus; 26.7% bought the large size and 6.7% bought the small size. As the FAO (2017) reports, size-related preferences for tilapia are influenced by a market segmentation of consumers, driven by the specific use of the fish. The size of the O. mossambicus being sold plays a major role in the profitability of an operation. While plate-sized fish are generally more popular amongst general consumers, growing tilapia to larger weights (i.e., 300 grams or more) is less profitable than selling them at smaller sizes (DAFF, 2018). This could explain why fish traders prefer buying medium-sized O. mossambicus.

Table 4: Fish Species Preferred by Consumers who eat o. Mossambicus

Species	Most Preferred	Preferred	Less Preferred	Not Preferred	Total	Mean
Hake	33.3%	37.5%	16.7%	12.5%	100%	2.92
Sole	0%	0%	8.7%	91.3%	100%	1.09
Tilapia	60%	20%	13.3%	6.7%	100%	3.33
Catfish	17.4%	13.0%	4.3%	65.2%	100%	1.83
Trout	0%	0%	6.7%	90.5%	100%	1.10
Carp	**4.3%**	**17.4%**	**26.1%**	**52.2%**	**100%**	**1.74**

On a four-point scale of 1 = not preferred and 4 = most preferred, the most preferred type of fish was O. mossambicus (weighted mean index = 3.33 out of 4), followed by hake (weighted mean index = 2.92 out of 5) and catfish (weighted mean index = 1.83 out of 5) (Table 4). The least preferred type was sole (weighted mean index of 1.09 out of 4). These results are similar to those reported by Oyeleke (2017), who found that 60% of buyers demanded tilapia more than any other fish species.

Factors that Reduce the Volumes of o. Mossambicus from Farmers: Overall, the main factor cited as having the potential to reduce the volumes of O. mossambicus was 'low product demand' (weighted mean index = 3.39 out of 5; SD = 1.088); closely followed by 'lack of market knowledge' (weighted mean index = 3.26 out of 5; SD = 1.241) and 'ineffective marketing' (weighted mean index of 3.13 out of 5; SD = 1.334). The lowest-ranked factor was 'increased competition' (weighted mean index = 2.73 out of 5; SD = 1.339). Low product demand can be linked to responses that revealed a lack of market knowledge and ineffective marketing. These results align with those of Baloyi (2010), who found that 76% of farmers in two districts (Capricorn and Vhembe) indicated that they did not have access to market information, especially in respect of market prices and the products that were in high demand by markets during certain periods.

Table 5: Factors that Reduce the Volumes of O. Mossambicus (n=90)

Factor	Strongly Disagreed	Disagree	Unsure	Agree	Strongly Agree	Total %	Mean	Std. Deviation
Poor Locality	21.3%	10.1%	25.8%	31.5%	11.2%	100	3.02	1.315
Ineffective Marketing	8.9%	34.4%	12.2%	23.3%	21.1%	100	3.13	1.334
Lack of Market knowledge	10.1%	18.0%	21.3%	34.8%	15.7%	100	3.26	1.241
Low Product Demand	4.5%	19.1%	18.0%	47.2%	11.2%	100	3.39	1.088
Increased Competition	17.0%	34.1%	19.3%	13.6%	15.9%	100	2.73	1.339

Relationship between Factors Contributing to Reducing Volumes of O. Mossambicus: A Kruskal-Wallis one-way ANOVA test was conducted to determine the homogeneity of the sampled farmers concerning their responses to the factors that reduce the volume of O. mossambicus. The results of the ANOVA are reported in Table 6. The F-statistic and the corresponding p-value were used to determine whether or not the differences were significant. The statistical significance of the variables in the multivariate analysis was tested at levels of $p \leq 0.05$.

Table 6: Test of Homogeneity (ANOVA) of O. Mossambicus Production Factors (n=90)

Factors that Reduce Production Volumes of O. Mossambicus		Sum of Squares	DF	Mean Squares	F-Statistics	Sig
Poor locality (farm location)	Between groups	0.456	2	0.228	0.129	0.879
	Within groups	153.500	87	1.764		
	Total	153.956	89			
Ineffective Marketing (farm location)	Between groups	2.248	2	1.124	0.626	0.537
	Within groups	156.152	87	1.795		
	Total	158.400	89			
Market knowledge (farm location)	Between groups	2.323	2	1.162	0.750	0.475
	Within groups	134.799	87	1.549		
	Total	137.122	89			
Low Product Demand (farm location)	Between groups	0.127	2	0.063	0.052	0.949
	Within groups	105.262	87	1.210		
	Total	105.389	89			
Increased Competition (farm location)	Between groups	5.161	2	2.580	1.454	0.239
	Within groups	154.439	87	1.775		
	Total	**159.600**	**89**			

*$p \leq 0.05$

It is evident from the test of the homogeneity of farmers of O. mossambicus (see Table 6), that there were no significant differences within and between groups in respect of the factors that reduce the volumes of O. mossambicus, such as poor locality (F-statistic = 0.129; p = >001); ineffective marketing (F-statistic = 0.626; p = >001); lack of market knowledge (F-statistic = 0.750; p = >001); low product demand (F-statistic = 0.052; p = >001) and increased competition (F-statistic = 1.454; p = >001).

5. Conclusion and Recommendations

What emerged from the demand analysis of O. mossambicus is the indication that the fish is in demand in South Africa, as shown by the broad knowledge of the participating fish traders and consumers. The results indicate that O. mossambicus farmers sell those fish fresh to informal fish traders and consumers. Farmed fresh, the O. mossambicus is generally marketed at farm stalls at a weight of less than two kilograms per fish. Fresh O. mossambicus is therefore sold in local markets, rather than via retail or formal outlets. Since fish traders buy and sell frozen O. mossambicus, it appears that efforts should be directed at taking a different approach to traditional frozen fish, if O. mossambicus farmers want to position themselves more competitively. O. mossambicus can also be exported to foreign markets due to the product being frozen, allowing for long-distance transportation. The results indicate that 58.4% of respondents agreed that low product demand (a mean of 3.39 out of 5) reduced the volumes of O. mossambicus – this can be linked to the responses that revealed both a lack of market knowledge and ineffective marketing. An ANOVA test showed the volumes of O. mossambicus were not determined by poor locality, ineffective marketing, a lack of market knowledge, low product demand or increased competition, thus the null research hypothesis – that there is no significant difference within and between groups, in respect of the factors that reduce the volumes of O. mossambicus – is accepted.

Practical Implications: The study was based on the premise that fish farmers should first understand the culture of O. mossambicus consumption in South African society if access to the market is to be achieved and strengthened. Second, they should understand that formal markets prefer frozen O. mossambicus, as that directly affects customers and their demands and specifications for purchasing the fish, while there is the local, national and export market potential for raw and processed products, which in turn affects the volumes of the product. The Department of Agriculture should educate O. mossambicus farmers about consumption cultures in South Africa. It became evident that O. mossambicus farmers would increase the volumes of fresh fish production if they were confident that a buyers' market was available, to sell to. Fresh O. mossambicus is the reason why formal fish traders do not buy from O. mossambicus farmers. More effort should be directed at selling O. mossambicus frozen if a market exists. Increased volumes of frozen O. mossambicus may play a significant role in securing the formal market (local, national and export), and growing the informal market.

Therefore, connecting O. mossambicus farmers with formal markets would improve the volumes of frozen O. mossambicus, enhancing growth and sustainability. This can be done by involving intermediaries, who are often able to perform marketing functions better than the producer of a product can. A producer can perform his/her own distribution function (including delivery) if the geographic area of the market is small, customers' needs are specialized and risk levels are low. However, intermediaries generally provide more efficient means of distribution, if customers are widely dispersed, or if special packaging and storage are needed (Longenecker et al., 2017). It is therefore recommended that local agents or brokers (middlemen) be used by O. mossambicus farmers, as that will assist them in selling to wholesalers and retailers, as well as to the national and export market. In addition, O. mossambicus farmers and stakeholders should improve communication by using social media platforms and should form marketing groups to sell their fish – that will allow improved market access and raise product awareness.

As a single brand could be developed to market each farmer's product. They can then sell the product to consumers or secondary intermediaries, such as processors. The findings of the study reported here indicated that 58.4% of respondents agreed that low product demand reduced the volumes of O. mossambicus being produced. It is therefore recommended that low product demand should be considered in any local policy aimed at improving freshwater aquaculture. Moreover, an O. mossambicus aquaculture forum should ideally be established, to include aquaculture stakeholders (O. mossambicus farmers, fish traders, fish consumers, the DAFF and the Agricultural Research Council). This will assist in developing primary legislation governing freshwater aquaculture. Moreover, the government should identify well-established O. mossambicus farmers, and match them with farmers in Limpopo for mentorship and coaching, which will develop in them the skills and confidence needed to manage and expand their farms and enterprises.

Future Research Directions: The study recommends that future research investigate the financial literacy of O. mossambicus farmers. In addition, accurate audits should be conducted on O. mossambicus farms, to determine the true production capacity and supply in different parts of South Africa and other countries.

Ethical Compliance: The College of Economic and Management Sciences (CEMS) provided ethical clearance for the larger study on 13 July 2018, ethical clearance certificate no. 2018 CEMS ESTTL 007. This paper is part of a thesis entitled: 'A sustainable marketing framework for small business Mozambique Tilapia (Oreochromis mossambicus) farmers in Limpopo province'.

References

Abdulla-al-Asif, M., Samad, A., Rahman, M. H., Almamun, M., Farid, S. M. Y. & Rahman, B. S. (2015). Socio-Economic Condition of Fish Fry and Fingerling Traders in Greater Jessore Region, Bangladesh. *International Journal of Fisheries and Aquatic Studies*, 2, 290-293.

Arokiasamy, L. & Ismail, M. (2009). The Background and Challenges Faced by the Small Medium Enterprises: A Human Resource Development Perspective. *International Journal of Business and Management*, 4(10), 95.

Asmah, R. (2008). Development Potential and financial viability of fish farming in Ghana. Doctoral thesis. Scotland: University of Stirling.

ATFALCO. (2012). Fisheries and Aquaculture Industry in Namibia. The Ministerial Conference of Fisheries Cooperation among African States Bordering the Atlantic Ocean (ATFALCO). Retrieved from www.comhafat.org/fr/files/publications/11212201431035PM.pdf

Baloyi, J. K. (2010). An Analysis of Constraints Facing Smallholder Farmers in the Agribusiness Value Chain: A Case Study of Farmers in the Limpopo Province (Doctoral dissertation, University of Pretoria).

Béné, C., Arthur, R., Norbury, H., Allison, E. H., Beveridge, M., Bush, S. & Williams, M. (2016). Contribution of Fisheries and Aquaculture to Food Security and Poverty Reduction: Assessing the Current Evidence. *World Development*, 79, 177-196.

Bosma, N., Hill, S., Ionescu-Somers, A., Kelley, D., Guerrero, M. & Schott, T. (2021). Global Entrepreneurship Monitor, 2020/2021 Global Report. Retrieved from https://www.gemconsortium.org/report/gem-20202021-global-report

Bowmaker-Falconer, A. & Herrington, H. (2020). South Africa's Global Entrepreneurship Monitor (GEM) Report. Retrieved from https://www.usb.ac.za/usb_reports/south-africas-gem-report/

Brink, D., Mair, G. C., Hoffman, L. & Beardmore, J. A. (2002). Genetic Improvement and Utilisation of indigenous *tilapia* in Southern Africa: Final technical report, December 1, 1998, to June 31, 2002. Stellenbosch, South Africa: University of Stellenbosch, Aquaculture Division (FR027).

Britz, P. J., Hara, M. M., Weyl, O. L. F., Tapela, B. N. & Rouhani, Q. A. (2015). Scoping Study on the Development and sustainable utilization of inland fisheries in South Africa. Retrieved from https://www.researchgate.net/...Scoping_Study_on_the_Development_and_Sustainable.

Cant, M. C. (Ed.). (2017). Marketing Management: A South African Perspective. Cape Town: Juta & Co.

Charo-Karisa, H., Kyule, D., Obiero, K., Orina, P., Munguti, J., Githukia, C. & Opiyo, M. (2014). Consumer Preference and marketing of farmed Nile *tilapia (Oreochromis niloticus*) and *African catfish (Clarias gariepinus*) in Kenya: case study of Kirinyaga and Vihiga counties. *International Journal of Fisheries and Aquatic Studies*, 1(5), 67–76.

Co-operatives Act. (2005). South African Government. Retrieved from https://www.gov.za/documents/co-operatives-act.

Creswell, J. W. (2014). Research design: qualitative, quantitative, and mixed methods Approaches. 4th edn. Thousand Oaks, CA: Sage Publications.

Darko, F. A., Quagrainie, K. K. & Chenyambuga, S. (2016). Consumer Preferences for Farmed Tilapia in Tanzania: A choice Experiment Analysis. *Journal of Applied Aquaculture*, 28(3), 131-143.

Dekker, C. (2014). GIS-based Identification of Suitable Sites for Tilapia Fish Farming in Gauteng. Retrieved from https://www.ee.co.za/article/gis-based-identification-suitable-sites-tilapia-fish-farming-gauteng.html

Department of Agriculture, Forestry and Fisheries (DAFF). (2014). Aquaculture Yearbook. Retrieved from www.investbuffalocity.com/system/...Aquaculture%20Yearbook%202014%20SA.pd

Department of Agriculture, Forestry and Fisheries. (2014a). A Profile of the South African Aquaculture Market Value Chain. Retrieved from www.nda.agric.za/.../Marketing/.../Commondity%20Profiles/.../Aquaculture%20market

Department of Agriculture, Forestry and Fisheries. (2018). Nile and Mozambique Tilapia Feasibility Study. Retrieved from www.nda.agric.za/.../fisheries/.../final%20Nile%and20%Mossambicus%20Tilapia

Department of Trade and Industry (DTI). (2016). Economic Sectors, Employment & Infrastructure Development Cluster. Retrieved from https://www.thedti.gov.za/parliament/2016/IPAP_2016-17.pdf

Eltholth, M., Fornace, K., Grace, D., Rushton, J. & Häsler, B. (2015). Characterization of Production, Marketing and Consumption Patterns of Farmed Tilapia in the Nile Delta of Egypt. *Food Policy*, 51, 131-143.

Environmental Protection Agency (EPA). (2014). Estimated Fish Consumption Rates for the U.S. Population and Selected Subpopulations (NHANES 2003–2010). Retrieved from https://www.epa.gov/sites/production/files/2015.../fish-consumption-rates-2014.pdf

Erasmus, B., Strydom, J. W. & Rudansky-Kloppers, S. (Eds.). (2016). Introduction to Business Management. Cape Town: Oxford University Press Southern Africa.

Fitzsimmons, K. (2017). Slowing Sales of Tilapia in the US: Why and What Can be Done to Return to Rapid Growth. Retrieved from https://www.researchgate.net/.../314035969_ SLOWING_SALES_OF_TILAPIA_IN_TH....

Food and Agriculture Organization (FAO). (2008). Fishery and Aquaculture Country Profiles: The Kingdom of Lesotho. Retrieved from www.fao.org/.../pdf/.../en?...FAO%20Fisheries%20%26%20Aquaculture%20-%20Fish...

Food and Agriculture Organization. (2010). The State of World Fisheries and Aquaculture. Retrieved from www.fao.org/3/1-i1820e.pdf

Food and Agriculture Organization. (2014). The State of World Fisheries and Aquaculture. Retrieved from www.fao.org/3/a-i3720e.pdf

Food and Agriculture Organization. (2016). The State of World Fisheries and Aquaculture. Retrieved from www.fao.org/3/a-i717e.pdf

Food and Agriculture Organization. (2017). Social and economic performance of *tilapia* farming in Africa. Retrieved from http://www.fao.org/3/a-i728e.pdf

Food and Agriculture Organization. (2017a). Defining Small-Scale Food Producers to Monitor 2.3. of the 2030 Agenda for Sustainable Development. Retrieved from www.fao.org.i6858e.pdf

Gebrezgabher, S. A., Amewu, S. & Amoah, P. (2015). Consumer Preference and Willingness to pay for fish farmed in treated wastewater in Ghana. Paper presented at the 2015 AAEA & WAEA Joint Annual Meeting, San Francisco, California, 26–28 July 2015.

Gilliland, T. L. (2017). Characteristics of Fishers: A Case Study of Zeekoevlei, Cape Town (Master's thesis, University of Cape Town).

Groepe, F. (2015). The Role of Small Business in the Economy. Paper presented at the AHI Conference on the Role of Business in Local Government and Local Economic Development, George, 9 October 2015. Retrieved from www.resbank.co.za/.../Role%20of%20small%20business%201015%20.pdf

Herrington, M. & Kew, P. (2016). Global Entrepreneurship Monitor: Is South Africa heading for an Economic Meltdown? Retrieved from www.ideate.co.za/wp-content/.../gem-south-Africa-2015-2016-report.pdf

Industrial Development Corporation (IDC). (2015). Research into the Potential for the Production, Processing and Export of *Tilapia* for the Southern African Market. Retrieved from www.economic.gov.za/...research/...idc-research-into-the-potential-for-the-productio....

Kotler, P., Keller, K. L., Manceau, D. & Hemonned-Goujot, A. (2015). Marketing Management. Hoboken, NJ: Prentice Hall.

Leedy, P. D. & Ormrod, J. E. (2014). Practical research planning and design. Upper Saddle River, NJ: Pearson.

Longenecker, J. G., Petty, J., Palich, L. E., Hoy, F., Radipere, S. & Phillips, M. (2017). Small business management: launching and growing entrepreneurial ventures. Mason, OH: Thomson South-Western.

Lopriore, M. (2009). Supporting Enterprise Development and SME in Europe. *EIPAS cope*, 2009(2), 31-36.

Mutezo, A. (2013). Credit Rationing and Risk Management for SMEs: The Way Forward for South Africa. *Corporate Ownership and Control*, 10(2), 153-163.

Neethling, A. (2013). Entrepreneurship and How to Establish Your Own Business. Study guide for BSM1501. Pretoria: University of South Africa.

Nordenfjeldske Development Services (NFDS). (2016). The Role of Fisheries in Food and Nutrition Security in the SADC Region. Retrieved from https://nfds.info/...CCARDESA-Fisheries-and-Food-and-Nutrition-FINAL-report-Mar....

Operation Phakisa. (2014). Operation Phakisa: Unlocking the Economic Potential of South Africa's Oceans. Retrieved from www.operationphakisa.gov.za/…/aquaculture/…/OPOceans%20Aqua%20Executive%2

Oyeleke, S. B. (2017). Assessment of Productivity and supply chain of aquaculture projects in Gauteng province for sustainable operation. Master dissertation. Pretoria: University of South Africa.

Phosa, M. J. (2018). Contribution of small-scale fish-farming subsector to rural income generation in Thulamela Municipality, Limpopo province, South Africa. 3rd Annual International Conference on Public Administration and Development Alternatives, 4–6 July 2018, Stellenbosch University, South Africa.

Pienaar, L. & Traub, L. N. (2015). Understanding the smallholder farmer in South Africa: towards a sustainable lively-hoods classification. 29th International Conference of Agriculture Economists, Universita Degli Studi Di Milano, 8–14 August. Theme: Agriculture in an interconnected world.

Republic of South Africa (RSA). (2004). National Small Business Amendment Act 29 of 2004. Retrieved from https://www.thedti.gov.za/business.../small_amendment_act.pdf

Salehe, M. A., Luomba, J. O., Musiba, M., Mlaponi, E. & Mghamba, K. J. (2014). Consumer Preference on Value-added Products of Farmed Fish in Lake Victoria Basin, Tanzania. *Asian Journal of Applied Science and Engineering*, 3(4), 396-401.

Southern African Development Community (SADC). (2016). SADC Fisheries Fact Sheet, Vol. 1, No. 4: Focus on the Botswana Fisheries and Aquaculture. Retrieved from https://www.sadc.int/.../SADC_Fisheries_Fact_Sheet_Vol1._No._4_Focus_on_Botsw....

Statistics South Africa (Stats SA). (2017). Agriculture Survey. Retrieved from http://www.statssa.gov.za/publications/P1101/P11012017.pdf

Statistics South Africa. (2019). Quarterly Labour Force Survey: 1st Quarter 2019. Retrieved from www.statssa.gov.za/publications/P0211/P02111stQuarter2019.pdf

Strydom, J. (Ed). (2015). Entrepreneurship and How to Establish Your Own Business. Cape Town: Juta & Co.

Tapela, B. N., Britz, P. N. & Rouhani, Q. A. (2015). Scoping Study on the Development and Sustainable Utilisation of Inland Fisheries in South Africa. *Case Studies of Small-Scale Inland Fisheries*, 2, 1–17.

Van Aardt, I. & Bezuidenhout, S. (Eds.). (2014). Entrepreneurship & New Venture Management. Cape Town: Oxford University Press.

Van Rooyen, L. (2013). Trials for the *Tilapia* Industry. Retrieved from http//www.farmersweekly.co.za/animals/aquaculture/trials-for-the-tilapia-industry/

Weyl, O. L., Ellender, B. R., Wasserman, R. J. & Woodford, D. J. (2015). Unintended Consequences of Using Alien Fish for Human Benefit in Protected Areas. *Koedoe: African Protected Area Conservation and Science*, 57(1), 1-5.

Yongming, Y. (2013). Production and Marketing Systems of Farmed Tilapia in China. *International Journal of Fisheries and Aquaculture*, 5(2), 12-18.

Yuan, Y., Yuan, Y., Dai, Y. & Gong, Y. (2017). Economic Profitability of Tilapia Farming in China. *Aquaculture International*, 25(3), 1253-1264.

Zikmund, W. G., Babin, B. J., Carr, J. C. & Griffin, M. (2013). Business Research Methods. Boston, MA: Cengage Learning.

Journal of Economics and Behavioral Studies (JEBS)
Vol. 14, No. 2, June 2022 (ISSN 2220-6140)

The Impact of Workforce Diversity on Organizational Performance: A Review

Simon Rafaqat, Sahil Rafaqat, Saoul Rafaqat & Dawood Rafaqat
Forman Christian College (A Chartered University), Ayesha Street, Faiz Road, Lahore, Punjab, Pakistan
simondavid19934@gmail.com, sahilrafaqat1993@gmail.com, saoulrafaqat1997@gmail.com, dawood.rafaqat1999@gmail.com

Abstract: The paper aims to review the literature on the effect of workforce diversity including, gender, culture/race, age, and ethnicity, on firm performance. Many empirical papers have been reviewed in which different statistical models have been applied to data of multiple types of organizations across the regions and continents to find the association between the selected variables. The review methodology is selected to survey the literature on the impact of workforce diversity on organizational performance between the years 2000 and 2021. The reviewed literature shows that workforce diversity is significantly related to organizational performance. Moreover, this paper concludes that the positive significant influence of workforce diversity on organizational performance exceeds the negative significant impact. Also, workforce diversity is productive, if it is in appropriate balance. Whereas few studies reported no significant influence of workforce diversity on organizational performance.

Keywords: *Organizational performance, age, gender, culture, race, and ethnicity.*

1. Introduction

Workforce diversity has become a major strategic pillar that many firms feel is required of them to advance justice and fairness in the workplace (Ng & Sears, 2012; Mor Barak, 2015). The equal opportunity principle, which ensures that diversity can be useful to boost the efficiency and effectiveness of businesses instead of losing bright people based on these differences, is largely responsible for the emergence of the workforce (Henry & Evans, 2007). Also, Workforce diversity is increasing as the rising numbers of people are working in foreign countries due to the increase in immigration and globalization, and native people who have never been abroad are facing people with diverse backgrounds and cultures while working in local companies and organizations. Therefore, workforce diversity has been a complex phenomenon in the workplace (Johnston, 1991; Kundu, 2003; Adler, 1997; Henry & Evans, 2007). Workforce diversity, which is defined as the presence of more than one feature among employees, has become a hot topic for organizational academics and managers as a result of the advent of globalization (Cho, Ahraemi, & Mor Barak, 2017). In an organization, diversity refers to the presence of both commonalities and differences among its members in respect of gender, age, color, culture, disability, and physical abilities (Saxena, 2014). The ultimate dependent variable for researchers interested in virtually any area of management is organizational performance. Organizational performance is crucial to the survival and profitability of the modern corporation due to market rivalry for consumers, inputs, and capital.

Because of this, the construct now serves as the primary objective of contemporary industrial activity. The final criterion for evaluation of marketing, human resources (HR), operations management, and strategy is the contribution to organizational performance. It must be measured for managers and researchers to assess individual managerial decisions, the competitive position of firms, and the evolution and performance of firms over time (Richard, Devinney, Yip, & Johnson, 2009). Numerous studies have shown the advantages that diversity can have for an organization, including those related to role stress, organizational commitment, retention, and innovation (Gonzalez & DeNisi, 2009; Richard, Roh, & Pieper, 2013; Findler, Wind, & Mor Barak, 2007; Cho & Mor Barak, 2008; Hobman, 2003). However, Choi & Rainey, (2010) have shown that worker diversity may have detrimental effects on an organization's overall success. The following academics have undertaken numerous research to look into how workforce diversity affects organizational performance in connection with age, gender, culture, race, and ethnicity diversity (Fredette & Bernstein, 2019; Vairavan & Zhang, 2020; Orazalin & Baydauletov, 2020; Bennouri, Chtioui, Nagati, & Nekhili, 2018; Hassan, Marimuthu, & Johl, 2017; Hong, 2015; Hogan & Huerta, 2019). However, no conclusive evidence has been provided by the existing studies. In order to study the impact of age, gender, culture, race, and ethnic diversity on company performance, this review article will undertake a thorough assessment of studies from the last two decades.

2. Literature Review

Previous studies provide a mixture of results regarding the impact of workforce diversity on organizational performance. Clarifying the effect that workplace diversity has on organizational performance requires more study to investigate the relationship between diversity and performance. The following section of the paper is the literature review. Next is the methodology, followed by results and discussion, and the last section is the conclusion and recommendation. Using a cross-sectional archival, Mahadeo, Soobaroyen, & Hanuman, (2012) proved that age diversity positively influenced the return on assets of 42 Mauritian organizations. Age diversity had a detrimental effect on corporate social performance, according to research done on 95 US S&P 500 companies (Hafsi & Turgut, 2013). Similarly, Lu, Chen, Huang, & Chien (2015) used 93 German companies and 14,260 employees and concluded that age diversity strengthens and gives rise to the effectiveness of the Human resource system, which will acquire and develop the resources to have desirable behaviors that ultimately help to enhance the performance of an organization. De Meulenaere, Boone, & Buyl, (2016) took interest in finding the impact of age diversity in Belgium for which a sample of 5892 organizational observations and panel data estimation technique has been used for this study which concluded that if the firm has a large size & has high job security, then age diversity contributes positively to the firm's performance.

However, Backes-Gellner & Veen, (2009) conducted a study on 18,000 firms and two million employees and found that age diversity does not cause a decrease in firm productivity. Moreover, it positively impacts companies in terms of creativity and innovation that contributes to companies' performance. Kunze, Boehm, & Bruch, (2011) utilizing the data of 128 German firms, proved that age diversity led to the negative performance of the experimented firms. In addition, Abdullah & Ku Ismail, (2013) used 100 non-financial Malaysian businesses and provided evidence that age diversity harms a company's performance. Ali, Kulik, & Metz, (2009) used information from 422 firms that were listed on the Australian Securities Exchange between the years 2002 and 2005. According to the findings of the regression study, gender diversity and company performance were found to be positively correlated. An improvement in gender diversity might result in financial gains for a business. Ali, Kulik, & Metz, (2011) employed a longitudinal research approach to collect data from service and manufacturing organizations that are publicly listed. The findings indicated that gender diversity and company performance have a favorable linear relationship. Srinidhi, Gul, & Tsui, (2011) 2480 observations were made of US organizations, and it was discovered that there is a positive link between gender diversity and the level of profits in US organizations.

Moreover, Badal & Harter (2014) found that gender diversity has a positive impact on company performance at the business unit level using data from more than 800 business units of two distinct firms in the retail and hotel industries. However, Haslam, Ryan, Kulich, Trojanowski, & Atkins, (2010) utilized 2001-2005 panel data, archived on the UK FTSE 100 organizations, and discovered that gender diversity had a negative link with the market value of the chosen enterprises while having no association with return on assets and return on earnings. Bøhren & Strøm (2010) showed that there is a negative association between gender diversity and Tobin's Q, market return on the stock, and return on assets using data from 1200 Norwegian enterprises and panel data from 1989 to 2002. Brown (2002) using data from 121 executive directors in nonprofit organizations located in Los Angeles, proved that a higher percentage of racial diversity led to better organizational performance. Richard, McMillan, Chadwick, & Dwyer, (2003) conducted a study in 45 US states and proved that racial diversity increased the performance of the selected banks that adopted an innovation strategy. Roberson & Park, (2004) studied from 1998 to 2003 that the performance of 100 Fortune listed companies benefited from ethnic diversity. Cunningham, (2009) applied Hierarchical regression analysis to data gathered from 75 NCAA athletic departments and investigated that racial diversity positively affected the performance of the entire organization.

On the contrary, Roberson & Park, (2007) using 100 firms from Fortune's list from 1998 to 2003, it was suggested that when ethnic minorities' presence in leadership reaches a certain level, firm performance will suffer. Also, Choi & Rainey, (2010), diversity was found to be negatively associated with organizational performance utilizing the Central Personnel Data and the 2004 Federal Human Capital Survey. King, Dawson, West, Gilrane, Peddie, & Bastin, (2011) using information from the NHS National Staff Survey, which covered 142 hospitals in the UK, researchers discovered that ethnic diversity was found to be positively associated

with the courtesy felt by patients, which improved organizational performance. Results of an investigation on 100 non-financial Malaysian public companies revealed a significant and favorable relationship between ethnic diversity and the performance of the chosen firms (Marimuthu, 2008). However, according to a study that polled 743 workers from 131 US banks, ethnic diversity had a negative effect on the performance of the tested banks. Although it implies that by avoiding problems linked to potential status inequalities, the work experience of the members of the work unit and the performance of the unit can be improved (Leslie, 2017).

3. Methodology

The study aims to investigate the impact of workforce diversity on firm performance. The workforce diversity factors include age diversity, gender diversity, cultural diversity, race diversity, and ethnic diversity. For this purpose, a literature review methodology has been selected to survey the literature to find the association between employee diversity and organizational performance. This makes it challenging to stay on the cutting edge of research, remain current with best practices, and evaluate the body of evidence in a certain field of business research. This makes the literature review a more useful research technique than ever (Snyder, 2019). The papers relating to workforce diversity and organizational performance have been found using a variety of databases, including Google Scholar, Science Direct, Wiley Online Library, Elsevier, etc. There are many workforce-related aspects, but this review paper focuses on age, gender, culture/race, and ethnicity. In order to find the research articles relating to the topic, the keywords, including age diversity, gender diversity, cultural diversity, race diversity, ethnic diversity, and organizational performance, have been used. Moreover, the keywords for this paper are organizational performance, age, gender, culture, race, and ethnicity. The study focused mainly on articles published between 2000 and 2021.

4. Results and Discussion

Age Diversity and Organizational Performance: Age diversity is the degree of employee age difference within a group, firm or organization. Age diversity is a considerable issue in the workplace because a significant number of people ages more than 45 -50 are doing jobs in organizations (Williams & O'Reilly III, 1998; Li, Chu, & Lam, 2011; Milliken & Martins, 1996). For example, according to a study, 30% of the working class has an age of more than 50 years and this was predicted to grow by 10 percent in 20 years (Pollitt, 2006). The age workforce diversity is observed to increase all over the globe where young members have to work with older employees. Therefore, managers of the companies will need to understand and manage issues related to the age difference and enhance the company's performance (Li, Chu, & Lam, 2011). Some studies show a positive impact of age diversity and other studies show opposite results.

Positive Impact: Age diversity and age-related knowledge can increase creativity, decision-making quality, problem-solving ability, and efficiency, all of which boost employee productivity and profitability. (Pelled, 1996; Williams & O'Reilly III, 1998; Hambrick & Mason, 1984; Harrison & Klein, 2007; Klein & Harrison, 2007; Horwitz & Horwitz, 2007; Carton & Cummings, 2012). Akisimire, Masoud, Baisi, & Orobia, (2016) conducted a study on 78 manufacturing companies in Uganda and found that younger board members performed worse than older ones. Additionally, it concluded that age diversity has a good and significant impact on a company's financial performance.

An insurance company with 90 employees in Nairobi was the subject of a case study that looked at the relationship between age diversity and firm performance. It also showed that age diversity could boost the organization's creativity and innovativeness (Karimi & Busolo, 2019). Bal & Boehm, (2019) explained that age diversity enhanced the client satisfaction of clients of a German public service organization. Moreover, Li, et al., (2021) performed a large manager-report workplace survey with 3,888 respondents from the Society for Human Resource Management and examined how age variety might lead to benefits in social and human capital, ultimately enhancing organizational success. Syakhroza, Diyanty, & Dewo, (2021) proved that age diversity had a positive role in top management meetings and interactions which led to the performance of the selected bank. Mothe & Nguyen-Thi, (2021) collected information from the Luxembourg Employer Survey (LES) and Luxembourg Longitudinal Linked Employer-Employee Data, concluding that companies with a diversity of age groups perform better. Also, (Baporikar, 2021) age diversity and the performance of state-owned businesses are strongly correlated.

Negative Impact: On the contrary, (Byrne, 1971; Tajfel, Turner, Austin, & Worchel, 1979) age-based value inequalities have a negative effect on worker productivity. The problems, like in-group favoritism and out-group stereotyping and prejudice, can hinder cooperation, cohesion, and communication between employees of different ages in the firm, which could result in confrontations (Bell, Villado, Lukasik, Belau, & Briggs, 2011). In this way, the synergies are not realized and age diversity can negatively influence the firm productivity (Pelled, 1996; Grund & Westergaard-Nielsen, 2008; Klein, Knight, Ziegert, Lim, & Saltz, 2011; Kunze, Boehm, & Bruch, 2011). Luksyte, Avery, Parker, Wang, Johnson, & Crepeau, (2022) confirmed that when team agreeableness was low the greater age diversity caused lower team performance. Joseph, (2014) conducted a survey and utilized literature and came up with the conclusion that there is a negative relationship between age diversity and performance (Szatmari, 2021).

The National Basketball Association (NBA) panel data analysis suggested that the top performers performed poorly on teams with large age diversity and well on those with low age diversity. Mothe & Nguyen-Thi, (2021) collected information from the Luxembourg Employer Survey (LES) and Luxembourg Longitudinal Linked Employer-Employee Data and came to the conclusion that companies with polarized age groups suffer from the performance benefits of age variety. Talavera, Yin, & Zhang, (2021) did a study on all the companies listed on the Shenzhen Stock Exchanges between 2005 and 2015 and discovered that age diversity had a higher detrimental effect on government companies than on privately-held organizations. Van Dijk, Van Engen, & Van Knippenberg, (2012) conducted a meta-analysis of 146 studies and explored that age diversity is negatively associated with performance. Similarly, Kunze, Boehm, & Bruch, (2013) did a study comprising 147 companies and, using a structural equation modeling, concluded that the more age diversity, the more negative age-discrimination rise leads to negative organizational performance.

Gender Diversity and Organizational Performance: The number of female employees has enhanced across the globe because of women's rights (Ali, Kulik, & Metz, 2011). There are two ways to think about how gender diversity affects a company's performance. One takes into account how gender diversity affects how people see businesses generally in terms of their repute, image, and market worth, while the other takes into account how it affects managers and employees, which boosts productivity and profits for the business (Solakoglu & Demir, 2016). According to several studies, gender diversity promotes better-recruiting practices, worldwide relationships, and a broader understanding of the business world. However, other studies contend that it can lead to conflict in decision-making and delay the process, making it difficult for businesses to react swiftly to market shocks. This, in turn, can result in value destruction and lower firm performance (Carter, Simkins, & Simpson, 2003; Singh & Vinnicombe, 2004; Hambrick, Cho, & Chen, 1996).

Positive Impact: Using the data from 240 YMCA organizations proved that social performance enhanced as gender diversity increased while fundraising performance decreased as gender diversity increased (Siciliano 1996). Bonn, Yoshikawa, & Phan, (2004) did a study on 104 Australian industrial companies to examine the impact of gender diversity on return on assets and the market-to-book value ratio for Australian companies. Nguyen & Faff, (2007) revealed that there is a positive influence of gender diversity on market worth and return on assets of the 500 largest Australian firms utilizing 793 final observations. Gender diversity and company market value were found to be positively correlated using 68 Spanish organizations and 408 observations (Campbell & Mínguez-Vera, 2008). Also, (Mahadeo, Soobaroyen, & Hanuman, 2012) used a cross-sectional, archival study, and it was determined that gender diversity increased the return on assets for 42 Mauritian organizations. In the same way, Ali, Ng, & Kulik, (2014) selected 288 large firms listed Australian Securities Exchange and used Competing Linear and Curvilinear Predictions test in which results proved gender diversity had a positive relationship with organizational performance. In a study on 95 S&P 500 companies in the US, Hafsi & Turgut, (2013) found a positive relationship between gender diversity and corporate social performance.

Perryman, Fernando, & Tripathy, (2016) showed that as gender diversity rises, the top leadership teams' performance is enhanced which leads to organizational performance. Last but not least, Orazalin & Baydauletov, (2020) found a positive correlation between social and environmental performance across 2,624 firm-year samples from listed European enterprises. Zaid, Wang, Adib, Sahyouni, & Abuhijleh, (2020) examined the association between business sustainability performance and gender diversity, finding both a positive and insignificant relationship. Del Carmen Triana, Richard, & Su, (2019) proved that senior

management gender diversity brings about change, in high-tech companies, which leads to high organizational performance. Chijoke-Mgbame, Boateng, & Mgbame, (2020) examined the positive association between gender diversity and financial success in 77 African businesses. Bennouri, Chtioui, Nagati, & Nekhili, (2018) Using the information from 394 French companies, it was determined that having female directors greatly improved the experimental companies' return on assets and return on equity (Delgado-Piña, Rodríguez-Ruiz, Rodríguez-Duarte, & Sastre-Castillo, 2020). At various organizational levels, the productivity of a few Spanish banks is favorably and significantly correlated with gender diversity.

Negative Impact: Adams & Ferreira, (2008) applied unbalanced panel data from 1996–2003 to the data of 1939 US companies. It has been determined that gender diversity has a detrimental effect on a company's market value and return on assets. To determine the effect of gender diversity on share price and profit, researchers collected data from 432 US companies (Dobbin & Jung, 2011). It was determined that gender diversity had no impact on the profits of the chosen companies and had a negative impact on stock value. Bøhren & Staubo, (2016) used the data of all the listed Norwegian firms, which are the firms exposed to the GBL, and concluded the more the gender diversity increases, the firm's performance decreases. Bennouri, Chtioui, Nagati, & Nekhili, (2018) concluded that gender diversity proved to negatively significantly affect the market-based (Tobin's Q) performance of 394 French firms.

Insignificant Impact: In their study of 169 Japanese manufacturing companies, Bonn, Yoshikawa, & Phan, (2004) used an archival method with a one-year time lag and came to the conclusion that gender diversity did not significantly affect the performance of Japanese companies. Similar to this, Marimuthu & Kolandaisamy, (2009) used OLS regressions to analyze data from 100 non-financial Malaysian companies that were publicly listed between 2000 and 2006. It has been determined that there is no substantial correlation between gender diversity and firm performance. Hassan, Marimuthu, & Johl, (2017) analyzed information on the board members and financial performance, including ROA and ROE, of 60 big publicly-traded companies in Malaysia between 2009 and 2013. The study concluded that organizational performance was not significantly impacted by gender diversity.

Racial Diversity and Organizational Performance: Racial diversity means the presence of employees belonging to different races instead of one race (Blau, 1977). The evidence showed that racially heterogeneous groups, in comparison to racially homogenous groups, proved to be beneficial for decision-making activities (Maznevski & Distefano, 2000). Additionally, when creating and implementing the strategy, racially diverse groups present a larger variety of ideas and more possibilities than homogenous groups (Watson, Kumar, & Michaelsen, 1993; Cox & Blake, 1991; Cox, Lobel, & McLeod, 1991). However, Roberson & Park, (2007) proposed that an increase in racial diversity caused a decline in firm performance.

Positive Impact: The different viewpoints brought about by racial diversity may inspire management teams to come up with more original and creative ideas and solutions (Miller & del Carmen Triana, 2009; Ancona & Caldwell, 1992; De Dreu & West, 2001; Bantel & Jackson, 1989). (Srikanth, Harvey, & Peterson, 2016) When good team dynamics are very relevant, racial diversity can improve organizational performance. Similarly, Richard, (2000) used a sample of 574 banks in North Carolina, California, and Kentucky, and 191 employees. The study came to the conclusion that racial diversity provided value in terms of performance, return on equity, and market performance, and positively impacted the performance of the firm in the banking industry. Smulowitz, Becerra, & Mayo, (2019) concluded that racial diversity is favorably correlated with the profitability of the experimental companies using a sample of 143 US law firms.

But that it may not have the same effect on top management. Fredette & Bernstein, (2019) drew a survey of 247 boards and explained that racial diversity improved board performance in terms of fiduciary performance, stakeholder engagement, and organizational responsiveness. The productivity of the chosen high-tech corporation was positively impacted by the racial diversity in higher and lower management (Richard, Triana, & Li, 2021). Additionally, it was shown that organizations with more ethnic diversity in top management compared to lower management were more productive than those with the opposite situation. Sharma, Moses, Borah, & Adhikary, (2020) employed a sample from the Fortune 2000 and a separate regression model to demonstrate that racial diversity improved the financial performance of the chosen companies, such as return on assets.

Negative Impact: Timmerman, (2000) collected data from 871 and 1,082 professionals in basketball and baseball teams respectively. The findings revealed that ethnic diversity has a detrimental effect on basketball performance and is unrelated to baseball team success (Pitts, 2005). Racial diversity proved to be unrelated to the performance outcomes (Lee, 2019). Another study, with a sample size of 129 to 204 US agencies, found that when minority representation increased, it had a detrimental effect on goal achievement, as opposed to a balanced minority representation, which could improve an organization's performance. However, Vairavan & Zhang, (2020) decided to use a mediation analysis methodology to pinpoint the role that employee and R&D productivity had in the relationship between racial diversity on the board and business performance. The study's findings demonstrated that the firm's performance was not directly impacted by the board's racial diversity.

Ethnic Diversity and Organizational Performance: Ethnic diversity has shown mixed findings; some studies report that diversity can generate innovation, and positively influence financial performance (Herring, 2009; Simons, Pelled, & Smith, 1999; Richard O. C., 2000; Richard, Barnett, Dwyer, & Chadwick, 2004), but some studies suggest that ethnic diversity can give rise to conflict and decrease cohesion (Jehn, Northcraft, & Neale, 1999).

Positive Impact: To demonstrate that ethnically varied teams performed better on the project tasks, two American teams were chosen, consisting of 75 ethnically diverse teams and 90 ethnically non-diverse teams (Watson, Johnson, & Zgourides, 2002). Pitts & Jarry, (2007) used data from Texas public schools to get the conclusion that, while ethnic diversity among instructors consistently had a detrimental impact on organizational performance, it had little effect at the managerial level. Rasul & Rogger, (2015) surveyed more than 4000 bureaucrats and assessed the completion rate of 4700 public projects. It was concluded that a unit enhancement of ethnic diversity bureaucrats causes an increase of nine percent in the completion rate of public projects in Nigeria. In 1999, the hiring of new ethnic minority officers in the English and Welsh police forces reduced the rate of crime significantly over 10 years of recruiting (Hong, 2015). Also, ethnic diversity reduced the rate of corruption allegations by the public and gave rise to better citizen attitudes specifically in terms of fair treatment. Employing a sample of 258 higher education workers in South Africa, it was found that ethnic diversity significantly and favorably affects workers' performance (Setati, Zhuwao, Ngirande, & Ndlovu, 2019). However, a study on four commercial banks in Naples using a multimodal regression model revealed that staff performance was unaffected by ethnic diversity (Shrestha & Parajuli, 2021).

Negative Impact: Ethnic diversity in the public school in the US state of Maryland had a negative impact on their performance (Pitts & Jarry, 2009). There was no correlation between the effectiveness of the Kisumu Law Courts in Kenya and ethnic diversity (Anyango & Florah, 2019). Another study included all the US equity REITs, using two-stage Heckman correction models, and proposed that ethnic diversity negatively impacted the operating performance of equity REITs (Hogan & Huerta, 2019). Another study with a sample of 508 respondents in federal health institutions revealed that the increase in ethnic diversity caused disunity and lack of cohesion among the employees (Njide, Onodugo, & Agbeze, 2018).

5. Conclusion and Recommendations

The review concludes that diversity in terms of age, gender, culture, race, and ethnicity significantly affects organizational performance. Additionally, it was discovered that workplace diversity had a greater benefit than negative effect on a company's success. Although diversity has benefits and advantages in respect of innovation and performance, a balanced approach is required in terms of employee diversity because it may lead to negative impacts, instead of positive, if the diversity exceeds a certain level. However, few studies reported no significant influence of workforce diversity on organizational performance. The current study does not include other workforce diversity factors such as religion, sexual orientation and capabilities, etc. These aspects of labor diversity can be inculcated in future studies in this field. Moreover, the workforce can enhance innovation and organizational success. Therefore, firms should opt for such strategies to manage the diverse workforce. It is recommended that more studies are required on workforce diversity management and practices to effectively manage employee diversity.

References

Abdullah, S. N. & Ku Ismail, K. I. (2013). Gender, ethnic and age diversity of the boards of large Malaysian firms and performance. *Jurnal Pengurusan*, 38, 27-40.

Adams, R. B. & Ferreira, D. (2009). Women in the boardroom and their impact on governance and performance. *Journal of Financial Economics*, 94(2), 291-309.

Adler, N. J. (1997). International Dimensions of Organizational Behavior. Cincinnati, OH: South. Western College Publishing.

Akisimire, R., Masoud, M. S., Baisi, M. D. & Orobia, L. A. (2016). Board member age diversity and financial performance of manufacturing firms: a developing economy perspective. *Journal of Economics and Behavioral Studies*, 8(5 (J)), 120-132.

Ali, M., Kulik, C. T. & Metz, I. (2009). The impact of gender diversity on performance in services and manufacturing organizations. Academy of management proceedings. 2009, 1-6. Briarcliff Manor, NY 10510: Academy of Management.

Ali, M., Kulik, C. T. & Metz, I. (2011). The gender diversity–performance relationship in services and manufacturing organizations. *The International Journal of Human Resource Management*, 22(7), 1464-1485.

Ali, M., Ng, Y. L. & Kulik, C. T. (2014). Board age and gender diversity: A test of competing linear and curvilinear predictions. *Journal of Business Ethics*, 125(3), 497-512.

Ancona, D. G. & Caldwell, D. F. (1992). Bridging the boundary: External activity and performance in organizational teams. *Administrative Science Quarterly*, 634-665.

Anyango, O. M. & Florah, O. M. (2019). Workforce Diversity and Performance of Kisumu Law Courts, Kenya. *International Journal of Business and Social Science*, 10(12), 24-34.

Backes-Gellner, U. & Veen, S. (2009). The impact of aging and age diversity on company performance. Available at SSRN: https://ssrn.com/abstract=1346895. 1-35.

Badal, S. & Harter, J. K. (2014). Gender diversity, business-unit engagement, and performance. *Journal of Leadership & Organizational Studies*, 21(4), 354-365.

Bal, M. P. & Boehm, S. A. (2019). How do ideals influence client satisfaction? The role of exhaustion, collective commitment, and age diversity. *Journal of Management*, 45(4), 1461-1487.

Bantel, K. A. & Jackson, S. E. (1989). Top management and innovations in banking: Does the composition of the top team make a difference? *Strategic Management Journal*, 10(S1), 107-124.

Baporikar, N. (2021). Succession Planning for Enhanced Performance in State-Owned Enterprises: Role of Age Diversity. *International Journal of Sociotechnology and Knowledge Development* (IJSKD), 13(3), 106-132.

Bell, S. T., Villado, A. J., Lukasik, M. A., Belau, L. & Briggs, A. L. (2011). Getting specific about demographic diversity variable and team performance relationships: A meta-analysis. *Journal of Management*, 37(3), 709-743.

Bennouri, M., Chtioui, T., Nagati, H. & Nekhili, M. (2018). Female board directorship and firm performance: What really matters? *Journal of Banking & Finance*, 88, 267-291.

Blau, P. M. (1977). Inequality and heterogeneity: A primitive theory of social structure (Vol. 7). New York: Free Press.

Boehm, S. a., Kunze, F. & Bruch, H. (2014). Spotlight on age-diversity climate: The impact of age-inclusive HR practices on firm-level outcomes. *Personnel Psychology*, 67(3), 667-704.

Bøhren, Ø. & Staubo, S. (2016). Mandatory gender balance and board independence. *European Financial Management*, 1, 3-30.

Bøhren, Ø. & Strøm, Ø. (2010). Governance and politics: Regulating independence and diversity in the board room. *Journal of Business Finance & Accounting*, 37(9-10), 1281-1308.

Bonn, I., Yoshikawa, T. & Phan, P. H. (2004). Effects of board structure on firm performance: A comparison between Japan and Australia. *Asian Business & Management*, 3(1), 105-125.

Brown, W. A. (2002). Racial diversity and performance of nonprofit boards of directors. *Journal of Applied Management and Entrepreneurship*, 7(4), 43-57.

Byrne, J. (1971). The attraction paradigm (vol 11). New York: Academic Press.

Campbell, K. & Mínguez-Vera, A. (2008). Gender diversity in the boardroom and firm financial performance. *Journal of Business Ethics*, 83(3), 435-451.

Carter, D. A., Simkins, B. J. & Simpson, W. G. (2003). Corporate governance, board diversity, and firm value. Financial Review, 38(1), 33-53.

Carton, A. M. & Cummings, J. N. (2012). A theory of subgroups in work teams. Academy of management review, 37(3), 441-470.

Chijoke-Mgbame, A. M., Boateng, A. & Mgbame, C. O. (2020). Board gender diversity, audit committee and financial performance: evidence from Nigeria. In Accounting Forum, 44(3), 262-286.

Cho, S. & Mor Barak, M. E. (2008). Understanding of diversity and inclusion in a perceived homogeneous culture: A study of organizational commitment and job performance among Korean employees. Administration in Social Work, 32(4), 100-126.

Cho, S., Ahraemi, K. & Mor Barak, M. E. (2017). Does diversity matter? Exploring workforce diversity, diversity management, and organizational performance in social enterprises. Asian Social Work and Policy Review, 11(3), 193-204.

Cho, Y., Kim, S., You, J., Moon, H. & Sung, H. (2020). Application of ESG measures for gender diversity and equality at the organizational level in a Korean context. European Journal of Training and Development, 45(4/5), 346-365.

Choi, S. & Rainey, H. G. (2010). Managing diversity in US federal agencies: Effects of diversity and diversity management on employee perceptions of organizational performance. Public Administration Review, 70(1), 109-121.

Cox, T. H. & Blake, S. (1991). Managing cultural diversity: Implications for organizational competitiveness. Academy of Management Perspectives, 5(3), 45-56.

Cox, T. H., Lobel, S. A. & McLeod, P. L. (1991). Effects of ethnic group cultural differences on cooperative and competitive behavior on a group task. Academy of management journal, 34(4), 827-847.

Cunningham, G. B. (2009). The moderating effect of diversity strategy on the relationship between racial diversity and organizational performance. Journal of Applied Social Psychology, 39(6), 1445-1460.

De Dreu, C. K. & West, M. A. (2001). Minority dissent and team innovation: the importance of participation in decision making. Journal of Applied Psychology, 86(6), 1191-1201.

De Meulenaere, K., Boone, C. & Buyl, T. (2016). Unraveling the impact of workforce age diversity on labor productivity: The moderating role of firm size and job security. Journal of Organizational Behavior, 37(2), 193-212.

Del Carmen Triana, M., Richard, O. C. & Su, W. (2019). Gender diversity in senior management, strategic change, and firm performance: Examining the mediating nature of strategic change in high tech firms. Research Policy, 48(7), 1681-1693.

Delgado-Piña, M. I., Rodríguez-Ruiz, Ó., Rodríguez-Duarte, A. & Sastre-Castillo, M. Á. (2020). Gender diversity in spanish banks: Trickle-down and productivity effects. Sustainability, 12(5), 2113.

Dobbin, F. & Jung, J. (2011). Corporate board gender diversity and stock performance: The competence gap or institutional investor bias. North Carolina Law Review, 89(3), 809-936.

Findler, L., Wind, L. H. & Mor Barak, M. E. (2007). The challenge of workforce management in a global society: Modeling the relationship between diversity, inclusion, organizational culture, and employee well-being, job satisfaction and organizational commitment. Administration in Social Work, 31(3), 63-94.

Florian, K., Boehm, S. & Bruch, H. (2013). Organizational performance consequences of age diversity: Inspecting the role of diversity-friendly HR policies and top managers' negative age Dijkstereotypes. Journal of Management Studies, 50(3), 413-442.

Fredette, C. & Bernstein, R. S. (2019). Ethno-racial diversity on nonprofit boards: A critical mass perspective. Nonprofit and Voluntary Sector Quarterly, 48(5), 931-952.

Gonzalez, J. A. & DeNisi, A. S. (2009). Cross-level effects of demography and diversity climate on organizational attachment and firm effectiveness. Journal of Organizational Behavior: The International Journal of Industrial, Occupational and Organizational Psychology and Behavior, 30(1), 21-40.

Grund, C. & Westergaard-Nielsen, N. (2008). Age structure of the workforce and firm performance. International Journal of Manpower, 29(5), 410-422.

Hafsi, T. & Turgut, G. (2013). Boardroom diversity and its effect on social performance: Conceptualization and empirical evidence. Journal of business ethics, 112(3), 463-479.

Hambrick, D. C. & Mason, P. A. (1984). Upper echelons: The organization as a reflection of its top managers. Academy of management review, 9(2), 193-206.

Hambrick, D. C., Cho, T. S. & Chen, M. J. (1996). The influence of top management team heterogeneity on firms' competitive moves. Administrative science quarterly, 41(4), 659-684.

Harrison, D. A. & Klein, K. J. (2007). What's the difference? Diversity constructs as separation, variety, or disparity in organizations. Academy of management review, 32(4), 1199-1228.

Haslam, S. A., Ryan, M. K., Kulich, C., Trojanowski, G. & Atkins, C. (2010). Investing with prejudice: The relationship between women's presence on company boards and objective and subjective measures of company performance. British Journal of Management, 21(2), 484–497.

Hassan, R., Marimuthu, M. & Johl, S. K. (2017). Bridging and bonding: How gender diversity influences organizational performance. Global Business and Management Research, 9(1), 117.

Henry, O. & Evans, A. J. (2007). Critical review of literature on workforce diversity. African Journal of Business Management, 1(4), 72-76.

Herring, C. (2009). Does diversity pay?: Race, gender, and the business case for diversity. American sociological review, 74(2), 208-224.

Hobman, E. V. (2003). The consequences of dissimilarity for conflict and workgroup involvement: The moderating influence of identification and group diversity climate. Ph.D. Dissertation. St Lucia, Qld: The University of Queensland.

Hogan, R. & Huerta, D. (2019). The impact of gender and ethnic diversity on REIT operating performance. Managerial Finance, 45(1), 72-84.

Hong, S. (2015). Ethnic diversity in public organizations and public service performance: Empirical investigation. Academy of Management Proceedings, 1, 11334. Briarcliff Manor, NY 10510: Academy of Management.

Horwitz, S. K. & Horwitz, I. B. (2007). The effects of team diversity on team outcomes: A meta-analytic review of team demography. Journal of Management, 33(6), 987-1015.

Jehn, K. A., Northcraft, G. B. & Neale, M. A. (1999). Why differences make a difference: A field study of diversity, conflict and performance in workgroups. Administrative science quarterly, 44(4), 741-763.

Johnston, W. B. (1991). Global workforce 2000: The new world labor market. Harvard Business Review, 69(2), 115-127.

Joseph, R. D. (2014). Age diversity and its impact on employee performance in Singapore. International Journal of Research & Development in Technology and Management Science–Kailash, 21(5), 79-98.

Karimi, J. & Busolo, E. (2019). Influence of Age Diversity on Organizational Performance: A Case. The University Journal, 1(3), 57-68.

King, E. B., Dawson, J. F., West, M. A., Gilrane, V. L., Peddie, C. I. & Bastin, L. (2011). Why organizational and community diversity matter: Representativeness and the emergence of incivility and organizational performance. Academy of Management Journal, 54(6), 1103-1118.

Klein, K. J. & Harrison, D. A. (2007). On the diversity of diversity: Tidy logic, messier realities. Academy of Management Perspectives, 21(4), 26-33.

Klein, K. J., Knight, A. P., Ziegert, J. C., Lim, B. C. & Saltz, J. L. (2011). When team members' values differ: The moderating role of team leadership. Organizational Behavior and Human Decision Processes, 114(1), 25-36.

Kundu, S. C. (2003). Workforce diversity status: a study of employees' reactions. Industrial Management & Data Systems, 103(4), 215–226.

Kunze, F., Boehm, S. A. & Bruch, H. (2011). Age diversity, age discrimination climate and performance consequences—a cross-organizational study. Journal of organizational behavior, 32(2), 264-290.

Kunze, F., Boehm, S. & Bruch, H. (2009). Age Diversity, Age Discrimination and Performance Consequences--A Cross-Organizational Study. Academy of Management Proceedings. 2009, pp. 1-6. Briarcliff Manor, NY 10510: Academy of Management.

Lee, H. (2019). Does increasing racial minority representation contribute to overall organizational performance? The role of organizational mission and diversity climate. The American Review of Public Administration, 49(4), 454-468.

Leslie, L. M. (2017). A status-based multilevel model of ethnic diversity and work unit performance. Journal of Management, 43(2), 426-454.

Li, J., Chu, C. L. & Lam, K. C. (2011). Age diversity and firm performance in an emerging economy: Implications for cross-cultural human resource management. Human Resource Management, 50(2), 247-270.

Li, Y., Gong, Y., Burmeister, A., Wang, M., Alterman, V. & Alonso, A. (2021). Leveraging age diversity for organizational performance: An intellectual capital perspective. *Journal of Applied Psychology,* 106(1), 71.

Liebermann, S. C., Wegge, J., Jungmann, F. & Schmidt, K. H. (2013). Age diversity and individual team member health: The moderating role of age and age stereotypes. *Journal of Occupational and Organizational Psychology*, 86(2), 184-202.

Lu, C. M., Chen, S. J., Huang, P. C. & Chien, J. C. (2015). Effect of diversity on human resource management and organizational performance. *Journal of Business Research*, 68(4), 857-861.

Luksyte, A., Avery, D. R., Parker, S. K., Wang, Y., Johnson, L. U. & Crepeau, L. (2022). Age diversity in teams: Examining the impact of the least agreeable member. *Journal of Organizational Behavior*, 43(3), 546-565.

Mahadeo, J. D., Soobaroyen, T. & Hanuman, V. O. (2012). Board composition and financial performance: Uncovering the effects of diversity in an emerging economy. *Journal of Business Ethics*, 105(3), 375-388.

Marimuthu, M. (2008). Ethnic diversity on boards of directors and its implications on firm financial performance*. The Journal of International Social Research*, 1(4), 431-445.

Marimuthu, M. & Kolandaisamy, I. (2009). Ethnic and gender diversity in boards of directors and their relevance to financial performance of Malaysian companies. *Journal of Sustainable Development,* 2(3), 139-148.

Maznevski, J. J. & Distefano, M. L. (2000). Creating value with diverse teams in global management. *Organizational Dynamics*, 29(1), 45-63.

Miller, T. & del Carmen Triana, M. (2009). Demographic diversity in the boardroom: Mediators of the board diversity–firm performance relationship. *Journal of Management Studies*, 46(5), 755-786.

Milliken, F. J. & Martins, L. L. (1996). Searching for common threads: Understanding the multiple effects of diversity in organizational groups. Academy of management review, 21(2), 402-433.

Mor Barak, M. E. (2015). Inclusion is the key to diversity management, but what is inclusion? *Human Service Organizations: Management, Leadership & Governance*, 39(2), 83-88.

Mothe, C. & Nguyen-Thi, T. U. (2021). Does age diversity boost technological innovation? Exploring the moderating role of HR practices. *European Management Journal,* 39(6), 829-843.

Ng, E. S. & Sears, G. J. (2012). CEO leadership styles and the implementation of organizational diversity practices: Moderating effects of social values and age. *Journal of Business Ethics*, 105(1), 41-52.

Nguyen, H. & Faff, R. (2007). Impact of board size and board diversity on firm value: Australian evidence. *Corporate ownership and control*, 24-32.

Njide, M. M., Onodugo, V. A. & Agbeze, E. K. (2018). Impact of ethnic diversity on team performance in federal Health institutions in South East Nigeria. *International Journal of Business and Entrepreneurship Research*, 11(4), 13-28.

Orazalin, N. & Baydauletov, M. (2020). Corporate social responsibility strategy and corporate environmental and social performance: The moderating role of board gender diversity. *Corporate Social Responsibility and Environmental Management*, 27(4), 1664-1676.

Pelled, L. H. (1996). Demographic diversity, conflict, and work group outcomes: An intervening process theory. *Organization Science*, 7(6), 615-631.

Perryman, A. A., Fernando, G. D. & Tripathy, A. (2016). Do gender differences persist? An examination of gender diversity on firm performance, risk, and executive compensation. *Journal of Business Research*, 69(2), 579-586.

Pitts, D. W. (2005). Diversity, representation, and performance: Evidence about race and ethnicity in public organizations. *Journal of Public Administration Research and Theory*, 15(4), 615-631.

Pitts, D. W. & Jarry, E. M. (2009). Getting to know you: Ethnic diversity, time and performance in public organizations. *Public administration*, 87(3), 503-518.

Pollitt, D. (2006). Bradford and Bingley audit age diversity in the workplace. *Human Resource International Digest*, 14(6), 27-28.

Rasul, I. & Rogger, D. (2015). The impact of ethnic diversity in bureaucracies: Evidence from the Nigerian civil service. *American Economic Review*, 105(5), 457-61.

Richard, O. C. (2000). Racial diversity, business strategy, and firm performance: A resource-based view. *Academy of Management Journal,* 43(2), 164-177.

Richard, O. C. (2000). Racial diversity, business strategy, and firm performance: A resource-based view. Academy of management journal, 43(2), 164-177.

Richard, O. C., Barnett, T., Dwyer, S. & Chadwick, K. (2004). Cultural diversity in management, firm performance, and the moderating role of entrepreneurial orientation dimensions. Academy of management journal, 47(2), 255-266.

Richard, O. C., Roh, H. & Pieper, J. R. (2013). The link between diversity and equality management practice bundles and racial diversity in the managerial ranks: Does firm size matter? Human Resource Management, 52(2), 215-242.

Richard, O. C., Triana, M. D. & Li, M. (2021). The effects of racial diversity congruence between upper management and lower management on firm productivity. Academy of Management Journal, 64(5), 5-1382.

Richard, O., McMillan, A., Chadwick, K. & Dwyer, S. (2003). Employing an innovation strategy in racially diverse workforces: Effects on firm performance. Group & Organization Management, 28(1), 107-126.

Richard, P. J., Devinney, T. M., Yip, G. S. & Johnson, G. (2009). Measuring organizational performance: Towards methodological best practice. Journal of Management, 35(3), 718-804.

Roberson, Q. M. & Park, H. J. (2004). Diversity Reputation And Leadership Diversity As Sources Of Competitive Advantage In Organizations. In Academy Of Management Proceedings. vol. 2004, no. 1, pp. F1-F6. Briarcliff Manor, NY 10510: Academy of Management.

Roberson, Q. M. & Park, H. J. (2007). Examining the link between diversity and firm performance: The effects of diversity reputation and leader racial diversity. Group & Organization Management, 32(5), 548-568.

Saxena, A. (2014). Workforce diversity: A key to improve productivity. Procedia economics and finance, 11, 76-85.

Setati, S. T., Zhuwao, S., Ngirande, H. & Ndlovu, W. (2019). Gender diversity, ethnic diversity and employee performance in a South African higher education institution. SA Journal of Human Resource Management, 17(1), 1-8.

Sharma, A., Moses, A. C., Borah, S. B. & Adhikary, A. (2020). Investigating the impact of workforce racial diversity on the organizational corporate social responsibility performance: An institutional logic perspective. Journal of Business Research, 107, 138-152.

Shrestha, P. & Parajuli, D. (2021). Impact of Workforce Diversity on Employee Performance. International Journal of Management, 12(2), 86-95.

Siciliano, J. I. (1996). The relationship of board member diversity to organizational performance. Journal of business ethics, 15(12), 1313-1320.

Simons, T., Pelled, L. H. & Smith, K. A. (1999). Making use of difference: Diversity, debate, and decision comprehensiveness in top management teams. Academy of management journal, 42(6), 662-673.

Singh, V. & Vinnicombe, S. (2004). Why so few women directors in top UK boardrooms? Evidence and theoretical explanations. Corporate governance: an international review, 12(4), 479-488.

Smulowitz, S., Becerra, M. & Mayo, M. (2019). Racial diversity and its asymmetry within and across hierarchical levels: The effects on financial performance. Human Relations, 72(10), 1671-1696.

Snyder, H. (2019). Literature review as a research methodology: An overview and guidelines. Journal of business research, 104, 333-339.

Solakoglu, M. N. & Demir, N. (2016). The role of firm characteristics on the relationship between gender diversity and firm performance. Management Decision, 54(6), 1407–1419.

Srikanth, K., Harvey, S. & Peterson, R. (2016). A dynamic perspective on diverse teams: Moving from the dual-process model to a dynamic coordination-based model of diverse team performance. Academy of Management Annals, 10(1), 453-493.

Srinidhi, B., Gul, F. A. & Tsui, J. (2011). Female directors and earnings quality. Contemporary accounting research, 28(5), 1610-1644.

Syakhroza, A., Diyanty, V. & Dewo, S. A. (2021). Top management team (TMT) age diversity and firm performance: the moderating role of the effectiveness of TMT meetings. Team Performance Management: An International Journal, 27(5/6), 486-503.

Szatmari, B. (2021). Young stars and red giants: The moderating effect of age diversity on the relationship between the proportion of high performers and team performance. *Journal of Applied Psychology*.

Tajfel, H., Turner, J. C., Austin, W. G. & Worchel, S. (1979). An integrative theory of intergroup conflict. Organizational identity: A reader, 56(65), 9780203505984-16.

Talavera, O., Yin, S. & Zhang, M. (2021). Tournament incentives, age diversity and firm performance. *Journal of Empirical Finance,* 61, 139-162.

Timmerman, T. A. (2000). Racial diversity, age diversity, interdependence, and team performance. *Small Group Research*, 31(5), 592-606.

Vairavan, A. & Zhang, G. P. (2020). Does a diverse board matter? A mediation analysis of board racial diversity and firm performance. Corporate Governance: *The International Journal of Business in Society*, 20(7), 1223-1241.

Verma, A. (2020). Critical review of literature on the impact of workforce diversity (specifically age, gender, and ethnic diversity) on organizational competitiveness. *Asian Journal of Management*, 11(1), 125-130.

Watson, W. E., Johnson, L. & Zgourides, G. D. (2002). The influence of ethnic diversity on leadership, group process, and performance: An examination of learning teams. *International Journal of Intercultural Relations,* 26(1), 1-16.

Watson, W. E., Kumar, K. & Michaelsen, L. K. (1993). Cultural diversity's impact on interaction process and performance: Comparing homogeneous and diverse task groups. *Academy of Management Journal*, 36(3), 590-602.

Williams, K. Y. & O'Reilly III, C. A. (1998). Demography and Diversity in Organizations: A review of 40 years of research. *Research in Organizational Behavior,* 20, 77-140.

Zaid, M. A., Wang, M., Adib, M., Sahyouni, A. & Abuhijleh, S. T. (2020). Boardroom nationality and gender diversity: Implications for corporate sustainability performance. *Journal of Cleaner Production*, 251, 119652.

Journal of Economics and Behavioral Studies (JEBS)
Vol. 14, No. 2, June 2022 (ISSN 2220-6140)

Green Product and Process Innovation, Corporate Environmental Ethics and Competitive Advantages among Manufacturing Firms in the Kingdom of Saudi Arabia

Tai Abdulrahman Alshammari[1], Khalid Mhasan Alshammary[2] & Fahad Maiyah Alshammari[3]
[1]Saudi Royal Fleet, Saudi Arabia
[2]King Khalid Hospital, Ha'il, Saudi Arabia
[3]Univesiti Sains Malaysia (USM), Penang, Malaysia
taialshammari2022@gmail.com, khalidalshammary84@gmail.com, fahadalshamari2021@gmail.com

Abstract: The prime objective of the study is to examine the impact of green product innovation, green process innovation, and corporate environmental ethics on the competitive advantages of Saudi manufacturing firms. In addition to that, the study has also planned to examine the mediating role of corporate environmental ethics and moderating role of corporate environmental management in the relationship between green product innovation, green process innovation, and competitive advantages of Saudi manufacturing. This study used a quantitative approach to research with a cross-sectional method for the collection of data. This study used purposive sampling for the collection of data from the production managers of the manufacturing industry of KSA. The participation of the production managers in current was on a volunteer base. A structured questionnaire was used to gather the data from the respondents. The scale item for all constructs was adapted from the previous studies and measured on a 5-point Likert scale. "Partial Least Squares" (PLS) method of analysis was employed for the analysis of the research model using the Smart-PLS (Ringle et al., 2020). The present study found out that if a firm is consistent about investing more in CEE, the KSA manufacturing industry would witness improvement in their GRpdI and competitive advantage. Thus, these findings can be utilized by the manufacturing industries in KSA. By observing the environmentalism approach of consumers and strict rules at the international level, the firms shouldn't avoid their environmental duties. This study intends to fulfill the purpose of contributing to managers of the manufacturing industry of KSA, their researchers and policy formulators which may further contribute to their respective areas.

Keywords: *Green product innovation, green process innovation, and corporate environmental ethics on the competitive advantages.*

1. Introduction

Green Innovation is considered now as one of the crucial and effective strategies for sustainable development of manufacturing industries due to the increasing stress on environmental issues (Ikram et al., 2021). An investment made in environmental projects was considered as a wastage of resources in the earlier period. But now, new trends for the firms have been set as new strict rules and regulations have been formulated for environmental issues which have completely rotated the concepts of competitiveness for organizations (Shafique et al., 2017). Green products and green processes are two categories of green innovation, encompassing innovative technologies regarding the reduction of unnecessary energy consumption, averting pollution, recycling of wastes, corporate environmental management (CEM) or green product designs (Levidow et al., 2016).

If organizations want to practice green innovation vigorously, the advantage can be taken from low cost and differentiation which may alter the rules for competition (Song and Wang, 2018). Hence, Green innovation is adopted more nowadays, as it is considered more profitable for the organization in the present era (Asadi et al., 2020). Focusing on how to be Green can lead to the exploitation of new market opportunities, consistent innovativeness and the creation of more wealth (Leyva-de la Hiz et al., 2022). The designs and packaging of products of the company can indulge the green concept with the idea of protecting the environment which can increase their repute of differentiation (Rajendran et al., 2019). While practicing environmental management, not only the company would be able to avoid persecution and complaints, but might become able to boost the efficiency of the production.

Establish new environmental markets, and thus, it can contribute to greater green innovation capabilities (Djenontin et al., 2018). According to the definition by Kuncoro and Suriani (2018), competitive advantage

(CA) is a particular situation in which no other market competitors can imitate the executed competitive strategies of a firm. It has been discussed in the prior research that regarding the KSA manufacturing industry, there is a positive relationship between green innovation and competitiveness (Huang et al., 2021). There is a greater impact of green innovation on product value which can balance the cost of investment in environmental causes. Green innovation ultimately leads to superior productivity and then the organization excels in its goal attainment (de Medeiros et al., 2022). As the global environment is changing drastically, environmental management is getting crucial for companies, and green innovation is consistently taking maximum attention of the firms for its implication. Hence, green innovation is a bright source for the economic and environmental development of a firm (Ghauri et al., 2021). KSA has implemented environmental regulations which can be satisfied by green innovation and hence, can improve the environmental management performance of an organization (Wang, 2019). Though the research in this domain about the antecedents of green innovation is still limited in the previous literature.

One of the antecedents of green innovation, corporate environmental ethics (CEE) is discussed in this study, thus, it provides the understanding of green innovation as the mediator which would mediate the relationship between CEE and competitive advantage in the manufacturing industry of KSA (Zameer et al., 2020). Mentioning the argument of (Teixeira et al., 2021), he states that a culture of a firm can provide a sustainable competitive advantage if that culture is rare, imperfectly imitable and valuable. Retention of legitimacy is not the only sole purpose of green management but also acts as a central hub of an organization that plays a key role in achieving sustainable competitive advantage. Organizational culture holds CEE as a key factor leading to innovative practices (Guo et al., 2020). The expectation for ethical behavior and corporate value is formalized by the CEE and, so it proves to be an incentive for competitive advantage and green innovation (Singh et al., 2019). Following is the structure of this study. The second section comprises hypotheses and a literature review. The third section comprises the methodology, data collection, sample selection and construct measurement. The fourth segment encompasses the reliability of the measurement, factor analysis, descriptive statistics, correlation coefficients between constructs and the results are demonstrated for the measurement and structural model. The present study exhibits discussions about the findings and implications and highlights the possible directions for conducting future studies in the fifth segment.

2. Hypotheses Development

CA is referred to those strategies executed by an organization that is not imitable by any of the competitors of the firm, even the competitors aren't capable of achieving those advantages which are achieved by the competitive strategy executing company (Roespinoedji et al., 2019). The unique resources which are exploited by a firm to gain innovation and competitive advantage include the following characteristics: rare, imperfectly imitable, valuable and un-substitutable (Xie et al., 2019). Due to the innovative approach, isolation mechanisms are generated through which advantages can be grasped and profit margins are being protected. In this present era of the knowledge economy, innovation is a key to competitive advantage (Nanath et al., 2017). Companies enable themselves to gain long-term benefits by structuring and utilizing their capabilities through innovation (Albort-Morant et al., 2018). With the help of successful innovation, it becomes difficult for the competitors to replicate the strategies which result in sustainable competitive advantage (Mahdi et al., 2019).

Those organizations which are excelling in green innovation are capable of obtaining competitive advantage and green innovation they are able to maintain their repute by selling environmental products and even contributing to new market creation (Lin et al., 2020). The organizations which are willing to invest in environmental causes and green innovation are not only capable of waste reduction but are also capable of boosting their productivity, improving their repute and image, therefore, growing the competitive advantage of a company relating to the environmental trends of international rules of protection of the environment and relevant to customer's view (Tonial et al., 2019). Furthermore, green innovation helps to create isolation mechanisms that are concerned with greater profitability and achievements of the firm. Literature has offered bits of knowledge on expected examples of internal and external supply-chain-based relations for environmental performance improvement (Feng et al., 2018). The previous literature gives increasing evidence about the positive association between environmental performance and supply chain management.

The prior literature and research have explained how external GSCM practices (such as coordination between supplier and customer) can lead to the adoption of internal practices related to GSCM to improve environmental performance in the wider context of the supply chain (Al-Sheyadi et al., 2019). The present study categorizes green innovation into two main divisions; GRprI and GRpdI. The two sources of obtaining CA have been mentioned as low coast and differentiation (Moravcikova et al., 2017). Differentiation strategies are helpful in the establishment of unique products by giving them unique characteristics. Companies might become capable of setting off their environmental investments with differentiation costs (Campiglio, 2016). Product design, reliability and quality can be improved by deploying green product innovation (GRpdI) and due to the concerns for environmental issues; the corporations can generate high-profit margins and offer high prices for green products. An organization can boost its green image by adopting GRpdI (Confente et al., 2020). Thus, GRpdI can lead to the achievement of competitive advantage (Muñoz et al., 2022). Not only in terms of competitive advantage, but also it is helpful in the reduction of cost. It has been mentioned in prior literature that pollution is the proof of incompetent use of resources (Shittu et al., 2021).

Along with the prevention of waste, green process innovation (GRprI) is also responsible for the improvement in the efficient use of resources (Awan et al., 2019). Productivity of the resources is boosted by GRprI through energy decreasing, material saving, reduction in resources, and waste recycling (Shahzad, et al., 2021). The benefit of GRprI is not only about the prevention of expense of pollution rather it also concerns the reduction of expenses generated through resources and cuts off the inclusive cost (Saether et al., 2021). GRprI can be carried on by organizations to boost their productivity and efficiency in the manufacturing process which may enable the organization to get the benefit of low cost (Gürlek et al., 2018). Along with all other benefits, it is easier to satisfy stakeholders through GRprI (Khan et al., 2021). Hence, a competitive advantage can be gained through GRprI adopted by the organizations. Following hypotheses, based on the above-mentioned arguments can be proposed:
Hypothesis 1 (H1): GRpdI has a positive impact on CA.
Hypothesis 2 (H2): GRprI has a positive impact on CA.

CEE is the complete belief in ethical practices, values, and environment concerning rules within an organization. There are six elements of CEE: ethics committees, ethics officers, ethics codes, ethics communication systems, disciplinary processes and ethics training programs (Remišová et al., 2019).

Internal innovative technologies can be adopted and established by developing synergetic relationships with the suppliers (Muñoz et al., 2022). According to the cousins et al. (2019) empirical evidence and coordination theory which has been mentioned in the prior section, it can be deduced that if a firm, particularly a manufacturing firm, lacks internal green innovation practices and the coordination internal with external practices can lead to less environmental performance improvements as it acts a catalyst to environmental ethics. In the same manner, the external green innovative practices, such as green design adopted for different procedures with suppliers to reduce the wastage and using customer coordination for producing environmentally friendly products, needs to be coordinated with internal practices and their process, such as special training of staff for issues on environmental management for the effective flow of task requirements from the hierarchy of the organization. Hence, the following hypothesis can be proposed by the present study on the prior mentioned arguments:
Hypothesis 3 (H3): GRpdI has a positive impact on CEE.
Hypothesis 4 (H4): GRpdI has a positive impact on CEE.

Firms must be paying attention to their objective of sustainable development by considering the global effects of environmental issues.

The values and expectations of a firm can be validated through CEE. Along with preventing the threat of protests, those companies which have a high benchmark of environmental ethics can make their repute better than those which have a low standard of environmental ethics (Vanclay et al., 2019). Thus, long-lasting advantages can be gained from effective environmental management. Firms are motivated to get a niche place in a market so that their rivals may not replicate their strategies and the firms enjoy their competitive edge, this situation is referred to as a competitive advantage. Not only the rules and regulations regarding the environment are met but the companies can make their competitors lag behind due to CEE. When companies

are devoted to maintaining their intangible assets, they become capable of sustaining their competitive advantage. Intangible assets of a firm might be comprised of CEE. It can be observed that those companies which practice environmental management can set themselves up to such a standard that no rivals can match them, they can easily sustain their competitive advantage by deploying particular competitive strategies. Hence, the following hypothesis can be proposed by the present study on the prior mentioned arguments:
Hypothesis 5 (H5): CEE mediates the relationship between the GRpdI competitive advantage.
Hypothesis 6 (H6): CEE mediates the relationship between the GRprI competitive advantage.

The external pressures of the environment may be a vital cause of adopting CEM. Nevertheless, it has been stated by neoclassical economics that the maximization of wealth should be the prime objective of an organization (41), But the institutional theory states that a firm should also pay attention to the external forces which hold an adequate impact on the strategies of that organization (Basheer et al., 2015). This further directs the firms to the point that firm's ultimate social goal is not only the maximization of profit but also to fulfill the requirements of legitimacy as it asserts certain pressures. Companies can use green innovation and put their products under the umbrella of green factors so that they can become capable of meeting the requirements of external pressures regarding legitimacy. Referring to the Resource-based view, it has been explicated that the main resources and competencies can lead to competitive advantage (Nuseir et al., 2020). It has been suggested by RBV that a firm can sustain its competitive advantage by making its corporate social responsibility a key competency (Muneer et al., 2019).

Operations of a company can be impacted by several forces which might include; competitive pressures, stakeholder activism and environmentalism, policies and regulations at the national level and international levels (Vanclay et al., 2019). Therefore, the firms should work on environmental management to cope with the international standards and policies regarding the environment. Thus, a set of a firm's strategies might include environmental management as a key element, additionally, from RBV perspective, it should be considered as a crucial competency for a firm (Agudelo et al., 2019). The previous studies conducted on corporate social responsibility indicate that the economic goals of a firm can be achieved by fulfilling its social responsibilities (Israel, 1992). The organizations are intended to be socially responsible and because of this, they are in CEM. Though it is noticed that environmental management does not serve short-term objectives but it complies to improve economic goals in the long-run objectives of a company. Moreover, it has been advised to the organizations that they should be considerate about their key stakeholders.

While formulating policies and strategies so that they could capture their trust and assistance (Muneer et al., 2019). It would be tough for the organizations to merge environmental management with their strategies if the organizations continue to give prime importance only to economic goals. The companies must be focusing on non-profit objectives and should be concerned about external institutions and stakeholders. Companies become capable of formulating competitive policies and ultimately firms are allowed to get first-mover benefits. Firms are forced by the environmental management standards that the green factor should be strictly incorporated in the products and services and thus generating high barriers to entry. To obtain a competitive advantage, firms can take assistance from their key stakeholders and external institutions. Therefore, referring to corporate social responsibility, institutional theory, RBV, and stakeholder theory, the arguments can support the positive relationship between competitive advantage and corporate environmental practices.
Hypothesis 7 (H7): CEM moderates the relationship between the GRpdI and CA.
Hypothesis 8 (H8): CEM moderates the relationship between the GRprI and CA.

3. Methodology

Sample and Data Collection: As this study concerns CA and environmental ethics in manufacturing firms in KSA, the sample contains employees of the manufacturing industry. The targeted respondents were the production managers of the manufacturing industry. In the selection of sample size, this study used inferential statistics. According to Israel (1992), a sample of fewer than fifty respondents is considered weaker, a sample of one hundred is reflected as a weak sample size, two hundred respondents assumed an adequate sample size, and a sample of three hundred respondents is considered a good sample size. This study also employed the G power software in the calculation of the minimum required sample size. The model

of this study consists of 2 predictors for the independent construct i.e. CA. The G power software confirmed that a three hundred sample size is required. Therefore, this study set sample size of three hundred respondents to collect the data. This study used a quantitative approach to research with a cross-sectional method for the collection of data. This study used purposive sampling for the collection of data from the production managers of the manufacturing industry of KSA. The participation of the production managers in current was on a volunteer base. A structured questionnaire was used to gather the data from the respondents. The scale item for all constructs was adapted from the previous studies and measured on a 5-point Likert scale.

4. Analysis and Results

"Partial Least Squares" (PLS) method of analysis was employed for the analysis of the research model using the Smart-PLS (Ringle et al., 2020). This study follows the two-stage analytical technique recommended (Matthews et al., 2018). This study examined the measurement model followed by the testing of the structural model (Ringle, et al., 2020). Fig. 1 elucidates the two-step PLS-SEM process.

Figure 1: A Two-Step Process of PLS Path Model Assessment

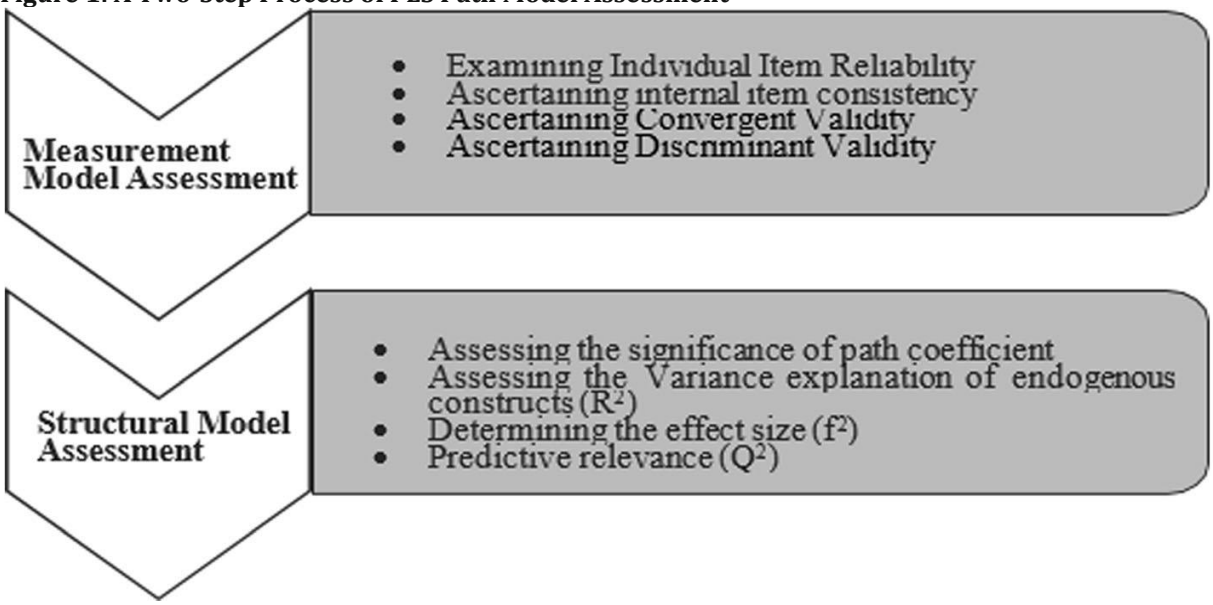

Measurement Model Evaluation: Two forms of validity were estimated by the examination of the measurement model, i.e., convergent and discriminant validity. In a measurement model, convergent validity is generally discovered by investigating the outer loadings, average variance extracted (AVE) and the composite reliability (CR) (Matthews et al., 2018). To establish the convergent validity, the value of loadings should be higher than 0.5 and the CR and AVE values should be greater than 0.7 and 0.5 respectively. The discriminant validity is examined by the HTMT ratio and the method of SMA. The output of the measurement model is given in Figure 2 and Table 1, Table 2 and Table 3.

Figure 2: Measurement Model Assessment

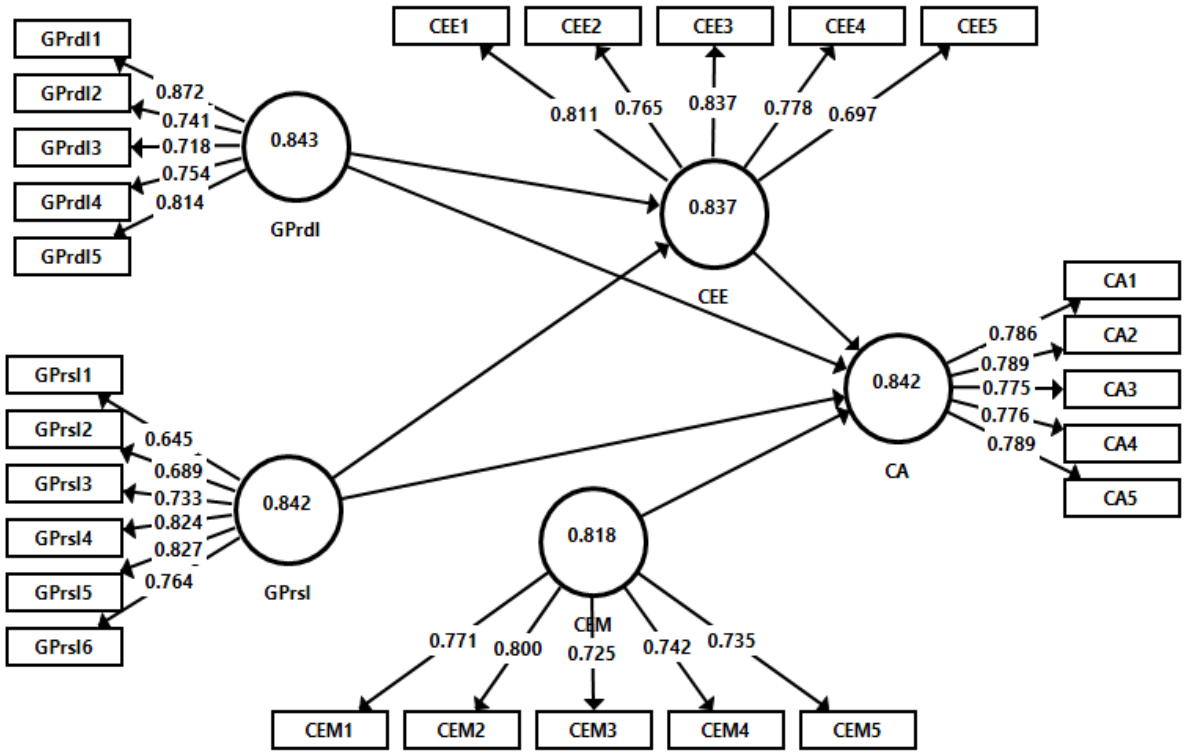

Table 1: "Internal Consistency, Convergent Validity, Composite Reliability and AVE"

Construct	Indicators	Loadings	Cronbach's alpha	Composite Reliability	AVE
competitive advantage	CA1	0.786	0.842	0.888	0.613
	CA2	0.789			
	CA3	0.775			
	CA4	0.776			
	CA5	0.789			
Corporate Environmental Ethics	CEE1	0.811	0.837	0.885	0.607
	CEE2	0.765			
	CEE3	0.837			
	CEE4	0.778			
	CEE5	0.697			
Corporate Environmental Management	CEM1	0.771	0.818	0.869	0.570
	CEM2	0.800			
	CEM3	0.725			
	CEM4	0.742			
	CEM5	0.735			
Green Product Innovation	GPrdI1	0.872	0.843	0.887	0.611
	GPrdI2	0.741			
	GPrdI3	0.718			

	GPrdI4	0.754			
	GPrdI5	0.814			
Green Process Innovation	GPrsI1	0.645	0.842	0.884	0.562
	GPrsI2	0.689			
	GPrsI3	0.733			
	GPrsI4	0.824			
	GPrsI5	0.827			
	GPrsI6	0.764			

Table 1 elucidated that the loadings of all items are higher than 0.6, the value of CR for all variables is above 0.7 and the value of AVE is also above 0.5 as recommended by (Hair et al., 2013). Hence, this study establishes convergent validity.

Table 2: Fornell-Larcker Criterion

	CA	CEE	CEM	GPrdI	GPrsI
CA	0.783				
CEE	0.604	0.779			
CEM	0.740	0.726	0.755		
GPrdI	0.685	0.541	0.619	0.782	
GPrsI	0.642	0.557	0.670	0.705	0.750

According to Ringle et al. (2020), discriminant validity is tested by the matching of correlations among the variables and the AVE square root of that variable. Referring to Table 2, the square root of the AVEs is higher than the correlations of constructs.

Table 3: Heterotrait-Monotrait Ratio (HTMT)

	CA	CEE	CEM	GPrdI	GPrsI
CA					
CEE	0.715				
CEM	0.753	0.793			
GPrdI	0.783	0.620	0.717		
GPrsI	0.763	0.655	0.821	0.825	

HTMT also shows that this study established the discriminant validity because all values of HTMT are lower than 0.85 (Referring to Table 3). Overall, both convergent and discriminant validities of the measures in the current study are established.

Structural Model Evaluation: A bootstrapping technique was employed to check the significance of the path coefficients (Hair et al., 2013). To examine the t-values, a bootstrapping method with 1000 sample was used. The output of the structural model is given in Figure 3 and Table 4, Table 5 and Table 6.

Figure 3: Structural Model Assessment

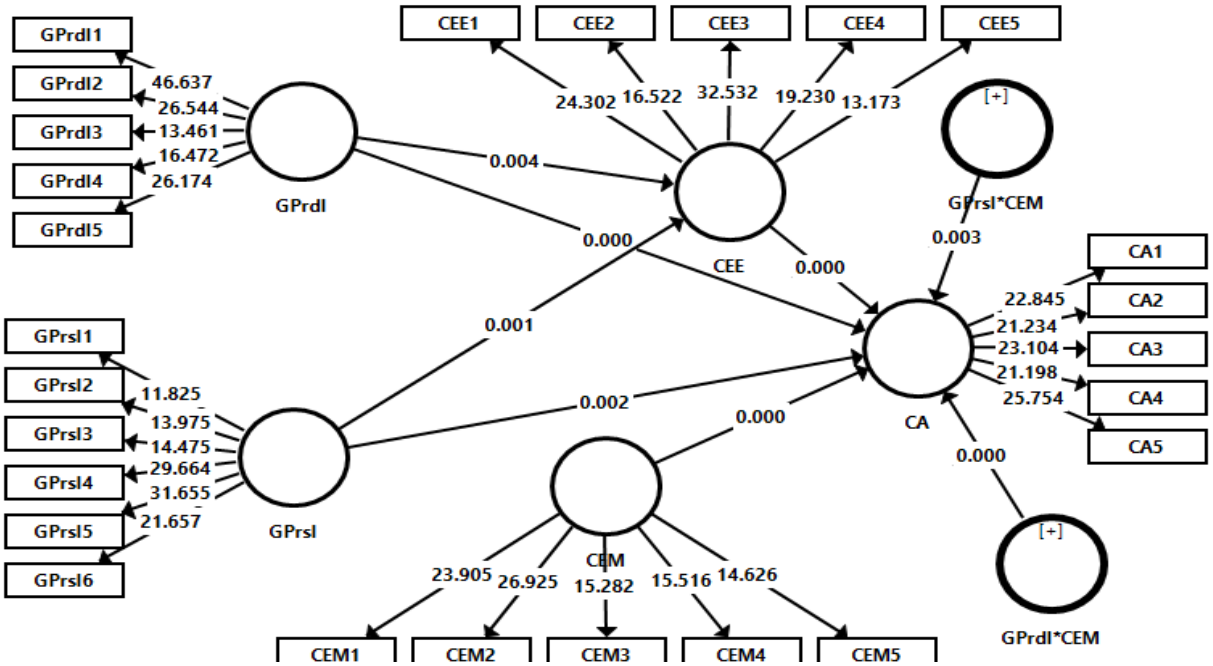

Table 4: Structural Model Assessment (Direct Effect Results and Decision)

Hypotheses	Relationship	Beta	STD	T Value	P Values
H_1	GPrdI -> CEE	0.294	0.102	2.868	0.004
H_2	GPrsI -> CEE	0.350	0.107	3.276	0.001
H_3	GPrdI -> CA	0.334	0.078	4.258	0.000
H_4	GPrsI -> CA	0.269	0.084	3.202	0.002

Table 4 shows the results of direct effects. Results indicated that GRpdI has a significant and positive effect on the Corporate Advantages (β= 0.294, t= 2.868) and GRprI also has a significant and positive effect on the Corporate Advantages (β= 0.350, t= 3.276). Moreover, GRpdI has also a significant effect on corporate advantages (β= 0.334, t= 4.258) and GRpdI has also a significant effect on corporate advantages (β= 0.269, t= 3.202). Hence, H_1, H_2, H_3, and H_4 are supported.

Table 5: Structural Model Assessment Indirect Effect (Mediation Effects)

Hypotheses	Relationship	Beta	STD	T Value	P Values
H_5	GPrdI->CEE -> CA	0.350	0.107	3.276	0.000
H_6	GPrsI->CEE -> CA	0.298	0.101	2.950	0.007

Table 5 indicates the results of mediating role of CEE between the relationship of GRpdI and GRprI with Corporate Advantages. Results show that CEE significantly mediates the relationship of GRpdI with Corporate Advantages (β= 0.350, t= 3.276). It also shows that CEE has a significant mediation role in the relationship of GRprI with Corporate Advantages (β= 0.298, t= 2.950).

Table 6: Structural Model Assessment (Moderation Effects)

Hypotheses	Relationship	Beta	STD	T Value	P Values
H_7	GPrdI*CEM -> CA	0.342	0.082	4.348	0.000
H_8	GPrsI*CEM -> CA	0.313	0.069	4.568	0.003

Table 6 shows the results of moderating the role of CEM on the relationship of GRpdI and GRprI with Corporate Advantages. Findings indicated that CEM significantly moderates the relationship of GRpdI with Corporate Advantages (β= 0.342, t= 4.348). Moreover, results also indicated that CEM has a significant moderation role in the relationship between GRprI and Corporate Advantages (β= 0.313, t= 4.568).

5. Conclusion and Recommendations

This study deals with the topic of issues of green innovation, CA, and CEE, together which makes them emerging into a new subject of ''green management'' considerate about the issue of economic development as well as the protection of the environment. Many manufacturing firms in KSA lack resources and hence, they are not up to mark for maintaining their standards according to the environmental protection policies. As the organizations in KSA cannot hold any compliance with the international environmental regulations, it would harm them in every possible way. Nonetheless, the present study found out that if a firm is consistent about investing more in CEE, the KSA manufacturing industry would witness improvement in their GRpdI and competitive advantage. Thus, these findings can be utilized by the manufacturing industries in KSA. By observing the environmentalism approach of consumers and strict rules at the international level, the firms shouldn't avoid their environmental duties. The external environmental pressures and increasing trends can become a driving force for the firms to engage themselves.

Environmental ethics lead to green innovation and ultimately moving forward to achieve competitive advantage. The present study has made KSA its center of research, the future researchers can make their studies more contextual by focusing on other areas as well. To test similar hypotheses in other countries according to their context would be a captivating issue. Future studies may make other countries their context of research which may be helpful in the generalization of the findings around the globe. The present study is only demonstrating the cross-sectional data by employing survey methods comprising of questionnaires, so, no vigorous changes in green innovation, environmental ethics and CA has been shown in different developmental stages of industry in KSA through longitudinal data. Thus, variations in environmental ethics, green innovation, and CA can be observed through the longitudinal study by future researchers in various developmental stages of the manufacturing industry of KSA. At the last, this study intends to fulfill the purpose of contributing to managers of the manufacturing industry of KSA, their researchers and policy formulators which may further contribute to their respective areas.

References

Agudelo, M. A. L., Jóhannsdóttir, L. & Davídsdóttir, B. (2019). A literature review of the history and evolution of corporate social responsibility. *International Journal of Corporate Social Responsibility*, 4(1), 1-23.

Albort-Morant, G., Henseler, J., Cepeda-Carrión, G. & Leal-Rodríguez, A. L. (2018). Potential and realized absorptive capacity as complementary drivers of green product and process innovation performance. *sustainability*, 10(2), 381.

Al-Sheyadi, A., Muyldermans, L. & Kauppi, K. (2019). The complementarity of green supply chain management practices and the impact on environmental performance. *Journal of environmental management*, 242, 186-198.

Asadi, S., Pourhashemi, S. O., Nilashi, M., Abdullah, R., Samad, S., Yadegaridehkordi, E. & Razali, N. S. (2020). Investigating the influence of green innovation on sustainability performance: A case on the Malaysian hotel industry. *Journal of cleaner production*, 258, 120860.

Awan, U., Kraslawski, A. & Huiskonen, J. (2019). Progress from blue to the green world: multilevel governance for pollution prevention planning and sustainability. Handbook of environmental materials management.

Basheer, M. F., Hussain, T., Hussan, S. G. & Javed, M. (2015). Impact of customer awareness, competition and interest rate on growth of Islamic banking in Pakistan. *International Journal of Scientific & Technology Research*, 4(8), 33-40.

Campiglio, E. (2016). Beyond carbon pricing: The role of banking and monetary policy in financing the transition to a low-carbon economy. *Ecological economics*, 121, 220-230.

Confente, I., Scarpi, D. & Russo, I. (2020). Marketing a new generation of bio-plastics products for a circular economy: The role of green self-identity, self-congruity, and perceived value. *Journal of Business Research*, 112, 431-439.

Cousins, P. D., Lawson, B., Petersen, K. J. & Fugate, B. (2019). Investigating green supply chain management practices and performance: The moderating roles of supply chain ecocentricity and traceability. International Journal of Operations & Production Management.

de Medeiros, J. F., Garlet, T. B., Ribeiro, J. L. D. & Cortimiglia, M. N. (2022). Success factors for environmentally sustainable product innovation: An updated review. Journal of Cleaner Production, 131039.

Djenontin, I. N. S. & Meadow, A. M. (2018). The art of co-production of knowledge in environmental sciences and management: lessons from international practice. *Environmental management*, 61(6), 885-903.

Feng, M., Yu, W., Wang, X., Wong, C. Y., Xu, M. & Xiao, Z. (2018). Green supply chain management and financial performance: The mediating roles of operational and environmental performance. *Business strategy and the Environment*, 27(7), 811-824.

Fornell, C. & Larcker, D. F. (1981). Structural equation models with unobservable variables and measurement error: Algebra and statistics.

Friedman, M. (1970). A theoretical framework for monetary analysis. *journal of Political Economy*, 78(2), 193-238.

Ghauri, P., Strange, R. & Cooke, F. L. (2021). Research on international business: The new realities. *International Business Review*, 30(2), 101794.

Gold, S., Seuring, S. & Beske, P. (2010). Sustainable supply chain management and inter-organizational resources: a literature review. *Corporate social responsibility and environmental management*, 17(4), 230-245.

Guo, Y., Wang, L. & Yang, Q. (2020). Do corporate environmental ethics influence firms' green practices? The mediating role of green innovation and the moderating role of personal ties. *Journal of cleaner production*, 266, 122054.

Gürlek, M. & Tuna, M. (2018). Reinforcing competitive advantage through green organizational culture and green innovation. *The service industries journal*, 38(7-8), 467-491.

Hair, J. F., Ringle, C. M. & Sarstedt, M. (2013). Partial least squares structural equation modeling: Rigorous applications, better results and higher acceptance. *Long range planning*, 46(1-2), 1-12.

Huang, Y. C., Borazon, E. Q. & Liu, J. M. (2021). Antecedents and consequences of green supply chain management in Taiwan's electric and electronic industry. Journal of Manufacturing Technology Management.

Ikram, M., Sroufe, R., Awan, U. & Abid, N. (2021). Enabling Progress in Developing Economies: A Novel Hybrid Decision-Making Model for Green Technology Planning. *Sustainability*, 14(1), 258.

Israel, G. D. (1992). Determining sample size.

Khan, P. A., Johl, S. K. & Johl, S. K. (2021). Does adoption of ISO 56002-2019 and green innovation reporting enhance the firm sustainable development goal performance? An emerging paradigm. *Business Strategy and the Environment*, 30(7), 2922-2936.

Kuncoro, W. & Suriani, W. O. (2018). Achieving sustainable competitive advantage through product innovation and market driving. *Asia pacific management review*, 23(3), 186-192.

Levidow, L., Lindgaard-Jørgensen, P., Nilsson, Å., Skenhall, S. A. & Assimacopoulos, D. (2016). Process eco-innovation: assessing Meso-level eco-efficiency in industrial water-service systems. *Journal of Cleaner Production*, 110, 54-65.

Leyva-de la Hiz, D. I. & Bolívar-Ramos, M. T. (2022). The inverted U relationship between green innovative activities and firms' market-based performance: The impact of firm age. *Technovation*, 110, 102372.

Lin, Y. H., Kulangara, N., Foster, K. & Shang, J. (2020). Improving green market orientation, green supply chain relationship quality, and green absorptive capacity to enhance green competitive advantage in the green supply chain. *Sustainability*, 12(18), 7251.

Mahdi, O. R., Nassar, I. A. & Almsafir, M. K. (2019). Knowledge management processes and sustainable competitive advantage: An empirical examination in private universities. *Journal of Business Research*, 94, 320-334.

Matthews, L., Hair, J. O. E. & Matthews, R. (2018). PLS-SEM: THE HOLY GRAIL FOR ADVANCED ANALYSIS. *Marketing Management Journal*, 28(1).

Moravcikova, D., Krizanova, A., Kliestikova, J. & Rypakova, M. (2017). Green Marketing as the Source of the Competitive Advantage of the Business. *Sustainability*, 9(12), 2218.

Muneer, S., Basheer, M. F., Shabbir, R. & Zeb, A. (2019). Does Information Technology (IT) Expeditethe Internal Audit System? Determinants of Internal Audit Effectiveness: Evidence from Pakistani Banking Industry. *Dialogue*, 14(2), 145.

Muñoz, C., Galvez, D., Enjolras, M., Camargo, M. & Alfaro, M. (2022). Relationship between innovation and exports in enterprises: A support tool for synergistic improvement plans. *Technological Forecasting and Social Change*, 177, 121489.

Nanath, K. & Pillai, R. R. (2017). The influence of green practices on competitive advantage: Mediation role of green innovation performance. *Information Systems Management*, 34(1), 3-19.

Rajendran, S. D., Wahab, S. N. & Singh, M. K. P. (2019). Malaysian consumers' preference for green packaging. *International Journal of Society Systems Science*, 11(4), 312-331.

Remišová, A., Lašáková, A. & Kirchmayer, Z. (2019). Influence of formal ethics program components on managerial ethical behavior. *Journal of Business Ethics*, 160(1), 151-166.

Ringle, C. M., Sarstedt, M., Mitchell, R. & Gudergan, S. P. (2020). Partial least squares structural equation modeling in HRM research. *The International Journal of Human Resource Management*, 31(12), 1617-1643.

Roespinoedji, R., Saudi, M. H. M., Hardika, A. L. & Rashid, A. Z. A. (2019). The effect of green organizational culture and green innovation in influencing competitive advantage and environmental performance.

Saether, E. A., Eide, A. E. & Bjørgum, Ø. (2021). Sustainability among Norwegian maritime firms: Green strategy and innovation as mediators of long-term orientation and emission reduction. *Business Strategy and the Environment*, 30(5), 2382-2395.

Shafique, M., Asghar, M. & Rahman, H. (2017). The impact of green supply chain management practices on performance: Moderating role of institutional pressure with mediating effect of green innovation. *Business, Management and Economics Engineering*, 15(1), 91-108.

Shahzad, M., Qu, Y., Zafar, A. U. & Appolloni, A. (2021). Does the interaction between the knowledge management process and sustainable development practices boost corporate green innovation? Business Strategy and the Environment.

Shittu, W., Adedoyin, F. F., Shah, M. I. & Musibau, H. O. (2021). An investigation of the nexus between natural resources, environmental performance, energy security and environmental degradation: Evidence from Asia. *Resources Policy*, 73, 102227.

Singh, S. K., Chen, J., Del Giudice, M. & El-Kassar, A. N. (2019). Environmental ethics, environmental performance, and competitive advantage: Role of environmental training. *Technological Forecasting and Social Change*, 146, 203-211.

Song, M. & Wang, S. (2018). Market competition, green technology progress and comparative advantages in China. Management Decision.

T. Nuseir, M., Basheer, M. F. & Aljumah, A. (2020). Antecedents of entrepreneurial intentions in smart city of Neom Saudi Arabia: Does the entrepreneurial education on artificial intelligence matter? *Cogent Business & Management*, 7(1), 1825041.

Teixeira, F., Ferreira, J. J. & Veiga, P. M. (2021). Does law as a resource bring a competitive advantage to companies? Management Research: Journal of the Iberoamerican Academy of Management.

Tonial, G., Cassol, A., Selig, P. M. & Giugliani, E. (2019). Intellectual capital management and sustainability activities in Brazilian organizations: A case study. In Intellectual capital management as a driver of sustainability, 119-138.

Vanclay, F. & Hanna, P. (2019). Conceptualizing company response to community protest: principles to achieve a social license to operate. *Land*, 8(6), 101.

Wang, C. H. (2019). How organizational green culture influences green performance and competitive advantage: The mediating role of green innovation. Journal of Manufacturing Technology Management.

Xie, X., Huo, J. & Zou, H. (2019). Green process innovation, green product innovation, and corporate financial performance: A content analysis method. *Journal of business research*, 101, 697-706.

Zameer, H., Wang, Y., Yasmeen, H. & Mubarak, S. (2020). Green innovation as a mediator in the impact of business analytics and environmental orientation on green competitive advantage. Management Decision.